ASTROFLAME
MANUFACTURERS OF PASSIVE FIRE STOP PRODUCTS

CE

1121

Astroflame Fireseals Ltd
Unit 8 The I O Centre
Stephenson Road
Segensworth, Fareham
Hampshire, PO15 5RU

14

1121-CPR-JA5024

ETA-14/0096
ETAG 026-Part 1
ETAG 026-Part 2
ASTRO HPE SEALANT

"see ETA-14/0096 for relevant characteristics"

Tehnical Data Sheet

Astroflame Graphite HPE Sealant®

UIC of product-type: AFHPE

Issue: 1
June 2014

Astroflame Fireseals Ltd
Unit 8, The I O Centre
Stephenson Road
Segensworth, Fareham
Hampshire, PO15 5RU

Tel: +44 (0) 1329 844500
Fax: +44 (0) 1329 844600
Email: sales@astroflame.com
Website: www.astroflame.com

warrington certifire certification
UKAS PRODUCT CERTIFICATION 087

warrington ISO9001 certification
UKAS QUALITY MANAGEMENT 087

TECHNICAL DATA SHEET

ASTRO HPE SEALANT®

ETA 14-0096

CE-1121-CPR-JA5024

Unique identification code of product-type: AFHPE

Technical Description of the Product

Astro HPE Sealant is an acrylic based graphite sealant used to reinstate the fire resistance performance of wall constructions where they have been provided with for the penetration of single or multiple services.

Astro HPE Sealant is gun applied to annular space around the service(s) to the required depth

Astro HPE Sealant is supplied in 310ml cartridges, 600ml foils, 2.5, 5, 10, 20kg pails, 250kg drums

Internal use - ETAG 026-3 (used as European Assessment Document EAD) Type Z_1

Specification of the Intended use in accordance with the relevant EAD

Intended Use

The intended use of Astro HPE Sealant is to reinstate the fire resistance performance of rigid and flexible wall constructions where they are penetrated by various cables, plastic and insulated metallic pipes

The specific elements of construction that the system Astro HPE Sealant may be used to provide a penetration seal in, are as follows:

Rigid walls

The wall must have a minimum thickness of 100mm and comprise concrete, aerated concrete or masonry, with a minimum density of 650kg/m^3

Rigid walls

The wall must have a minimum thickness of 120mm and comprise concrete, aerated concrete or masonry, with a minimum density of 650kg/m^3

Flexible walls

The wall must have a minimum thickness of 100mm and comprise timber or steel studs lined on both faces with minimum 2 layers of 12.5mm thick, 'Type F' Gypsum boards according to EN 520. In timber stud walls, no part of the penetration shall be closer than 100mm to a stud, the cavity must be closed between the penetration seal and the stud and minimum 1mm of insulation of class A1 or A2 according to EN 13501-1, is provided within the cavity between the penetration seal and the stud.

Flexible walls

The walls must have a minimum thickness of 120mm and comprise timber or steel studs lined on both faces with minimum 2 layers of 15mm thick, 'Type F' Gypsum boards according to EN 520. In timber stud walls, no part of the penetration shall be closer than 100mm to a stud, the cavity must be closed between the penetration seal and the stud and minimum 100mm of insulation of class A1 or A2 according to EN 13501-1, is provided within the cavity between the penetration seal and the stud.

Astro Batt - See Sec 1

Astro PS Coating - See Sec 2

The supporting construction must be classified in accordance with EN 13501-2 for the required fire resistance period

SEC 1

Astro Batt is a coated mineral wool board used to reinstate the fire resistance performance of wall constructions where they have been provided with apertures for the penetration of single or multiple services.

Astro Batt is supplied coated on both faces. The board is then cut and friction fit into the aperture, prior to being inserted into the aperture in the wall.

Astro Batts are 50mm thick and supplied in overall dimensions 1200mm x 600mm with a density of 140kg/m^3 is subject to a seperate ETA referenced ETA 14-0099

TECHNICAL DATA SHEET

ASTRO HPE SEALANT®

ETA 14-0096

CE-1121-CPR-JA5024

Unique identification code of product-type: AFHPE

SEC 2

Astro PS Coating is an ablative coating applied to mineral wool board used to reinstate the fire resistance performance of wall constructions where they have been provided with apertures for the penetration of single or multiple services.

The mineral wool board is the cut and friction fit into the aperture, prior to being inserted into the aperture on wall. The Astro PS Coating is then applied over the surface of the board material to provide a dry film thickness of 0.7mm. Astro PS Coating is subject to a separate ETA referenced
14-0097

The Astro HPE Sealant may be used to provide a penetration seal with plastic and insulated metallic pipes, and cables (for details see Annex C)

The total amount of cross sections of services (including insulation) should not exceed 60% of the penetration area.

The system Astro HPE Sealant may be used to seal apertures in the separating element up to 100mm wide by 300mm high. The minimum permitted separation between adjacent seals/apertures is 200mm.

Pipes must be installed singular, cables require no minimum separation

Services in walls shall be supported at maximum 270mm form the face of the separating element

The provisions made in this European Technical Assessment are based on an assumed working life of the Astro HPE Sealant of 10 years, provided that the conditions laid down in the product data sheet for the packaging/ transport/ storage/ installation/ use/ repair are met. The indications given on the working life cannot be interpreted as a guarantee given by the producer, but are to be regarded only as a means for choosing the rights products in relation to the expected economically reasonable working life of the works

Use Category

Type Z1: Intended for use in internal conditions with humidity equal to or higher than 85% RH excluding temperatures below 0°C, without exposure to rain or UV

The seals may only be penetrated by the services described in ETAss 14-0096; other parts or support constructions must not penetrate the seals

The service support construction must be fixed to the building element containing the penetration seal or a suitable adjacent building element, in such manner that in the case of fire, no additional load is imposed on the seal. Furthermore it id assumed that the unexposed face support is maintained for the required period of fire resistance

Pipe must be perpendicular to the seal surface

It is assumed that compressed air system are switched off by other means in the case of fire

The function of the pipe seal in case of pneumatic dispatch systems, pressurised air systems etc. is guaranteed only when the systems are shut off in case of fire

The assessment does not cover the avoidance of destruction of the seal or off the abutting building element(s) by forces caused by temperature changes in case of fire. This has to be considered when designing the piping system

The approval does not address any risks associated with leakage of dangerous liquids or gases caused by failure of the pipe(s) in case of fire

The durability assessment does not take account of the possible effect of substances permeating through the pipe on the penetration seal

TECHNICAL DATA SHEET

ASTRO HPE SEALANT®

ETA 14-0096
CE-1121-CPR-JA5024

Unique identification code of product-type: AFHPE

Air permeability

System Astro HPE Sealant has been tested in accordance with BS EN 1314-1 to provide the following results

Product tested			Astro Intu Mastic	
	Results under positive chamber pressure		Results under negative chamber pressure	
Pressure (Pa)	Leakage (m^3/h)	Leakage ($m^3/M^2/h$)	Leakage (m^3/h)	Leakage ($m^3/m^2/h$)
50	0.2	5.6	0.3	8.3
100	0.4	11.1	0.6	16.7
150	0.7	19.4	0.9	25.0
200	1.0	27.8	1.2	33.3
250	1.1	30.6	1.6	44.4
300	1.2	33.3	1.9	52.8
450	2.2	61.7	2.7	75.0
600	2.4	66.7	3.4	94.4

Dangerous Substances

The applicant is required to submit a written declaration stating whether or not the fire stopping and fire sealing product contains dangerous substances according to European and national regulations, when and where relevant in the Member States of destination, and shall list these substances

Astroflame Fireseals Limited declare that Product Astro HPE is in compliance with Council Directive 76/769/EEC of 27th July on the approximation of the laws,
regulations and administrative provisions of the Member States relating to restrictions on the marketing and use of certain dangerous substances and preparations (incl. all amendments and adaptations)

Confirmation has further been declared that all dangerous chemical substances ≥ 1.0% w/w as well as all toxic, carcinogenic, toxic for reproduction and mutagenic chemical substances ≥ 0.1% w/w (Status: 29. adaption - 2004/73/EG - of the EU directive 67/548/EEC - classification, packaging and labelling of dangerous substances) are stated in the Astro HPE material safety data sheets (according to 91/155/EEC including amendments) and have been considered for the classification of the products to the directive 1999/45/EG (classification of preparations, including amendments).amendments).

All dangerous chemical substances are below the classification limits of 67/548/EEC

TECHNICAL DATA SHEET

ASTRO HPE SEALANT®

ETA 14-0096
CE-1121-CPR-JA5024

Unique identification code of product-type: AFHPE

Durability and Serviceability

Astro HPE Sealant has been tested in accordance with EOTA Technical Report - TR024 - Edition November 2006, for the type Z_1 use category specified in ETAG 026-3 (used as European Assessment Document, EAD), and the results of the tests have demonstrated suitability for penetration seals intended for use in internal conditions with humidity equal to or higher than 85% RH excluding temperatures below 0°C, without exposure to rain or UV

Assessment and verification of constancy of performance (hereinafter AVCP) system applied, with references to its legal

According to the decision 1999/454/EC of the European Commission the system of assessment and verification of constancy of performance (see Annex V to the Regulation (EU) No 305/2011) given in the following table apply:

Products	Intended uses	Level or Class	System
Fire stopping and fire sealing products	For fire compartmentation and / or fire protection or fire performance	Any	System 1

Resistance to fire Classification of Astro HPE Sealant

Flexible and Rigid wall constructions according to 1.2.1 with wall thickness of minimum 120mm

Penetration seal with Astro HPE Sealant - Plastic Pipes

Penetration Specification	Astro HPE (installed both faces)	Backing Material	Classification
PVC Pipe 40mm ø 1.9 - 3mm wall thickness	10mm annulus x 25mm deep	N/A	EI120 U/C
PVC Pipe 125mm ø 4.8 - 7.4mm wall thickness	16mm annulus x 25mm deep	30mm deep, 80kg/m3	EI120 U/C
HDPE Pipe 63mm ø 7.2mm wall thickness, Cables up to 21mm ø	300mm wide x 100mm high x 25mm deep	N/A	EI120 U/C
HDPE Pipe 90mm ø 9.2mm wall thickness	12.5mm annulus x 25mm deep	N/A	EI120 U/C
ABS Pipe 90mm ø 6mm wall thickness	12.5mm annulus x 25mm deep	N/A	EI120 U/C

TECHNICAL DATA SHEET

ASTRO HPE SEALANT®

ETA 14-0096

CE-1121-CPR-JA5024

Unique identification code of product-type: AFHPE

DESIGN TO ETA 14-0096 & CE 1121-CPR-JA5024 ASTRO HPE SEALANT IN A FIRE RESISTANT SEAL AROUND PLASTIC PIPES THROUGH A FLEXIBLE WALL CONSTRUCTION

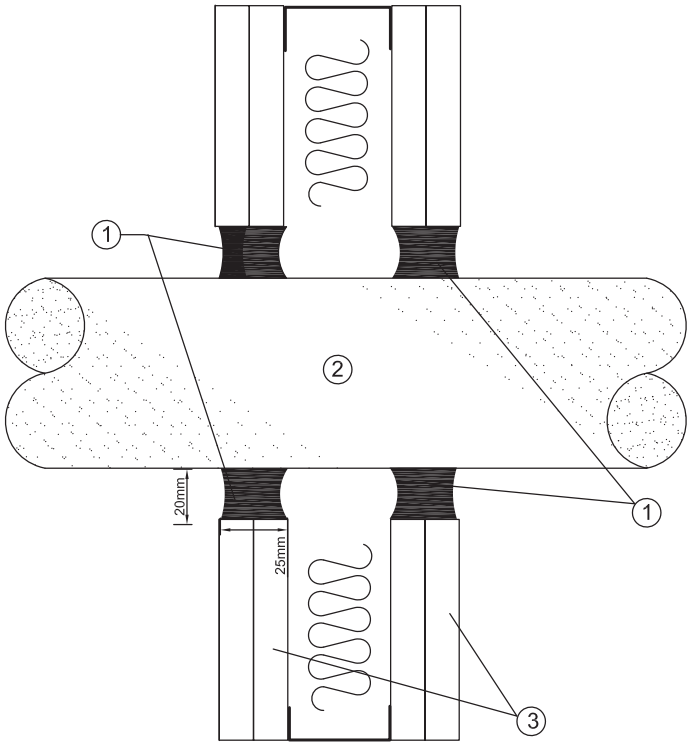

NOTES
1 - ASTRO HPE SEALANT
2 - PLASTIC PIPE
3 - FLEXIBLE WALL CONSTRUCTION
** NO BACKING MATERIAL REQUIRED UP TO 125mm

ASTROFLAME MANUFACTURERS OF PASSIVE FIRE STOP PRODUCTS	Astroflame (Fireseals) Ltd Intumescent House Unit 8 The IO Centre Stephenson Road Segensworth Fareham, PO15 5RU	FILE NAME: DET 26-0020 DATE: 20/05/14	ASTROFLAME has provided this specification on the basis of data, information & site conditions given to ASTROFLAME by the client, the respective ASTROFLAME product information & the existing level of technical knowledge. This specification relates to the expected performance of the proposed detail, were it to be subjected to the standardised test against which the judgement was made. The accuracy of this specification can only be guaranteed provided: 1. Only original ASTROFLAME products as defined within this specification are used 2. These specific products are used & installed only by a competant, experienced installer & by strictly obeying the conditions & calculations mentioned in this specification, as well as all relevent technical instructions, operating manuals, setting manuals, installation manuals & all other ASTROFLAME data sheets. 3. The proposed performance, listed prerequisities & criteria conform with actual existing site conditions & have been checked & agreed by the installer & client.

TECHNICAL DATA SHEET

ASTRO HPE SEALANT®

ETA 14-0096

CE-1121-CPR-JA5024

Unique identification code of product-type: AFHPE

DESIGN TO ETA 14-0096 & CE 1121-CPR-JA50224 ASTRO HPE SEALANT IN A FIRE RESISTANT SEAL AROUND PLASTIC PIPES THROUGH A FLEXIBLE WALL CONSTRUCTION

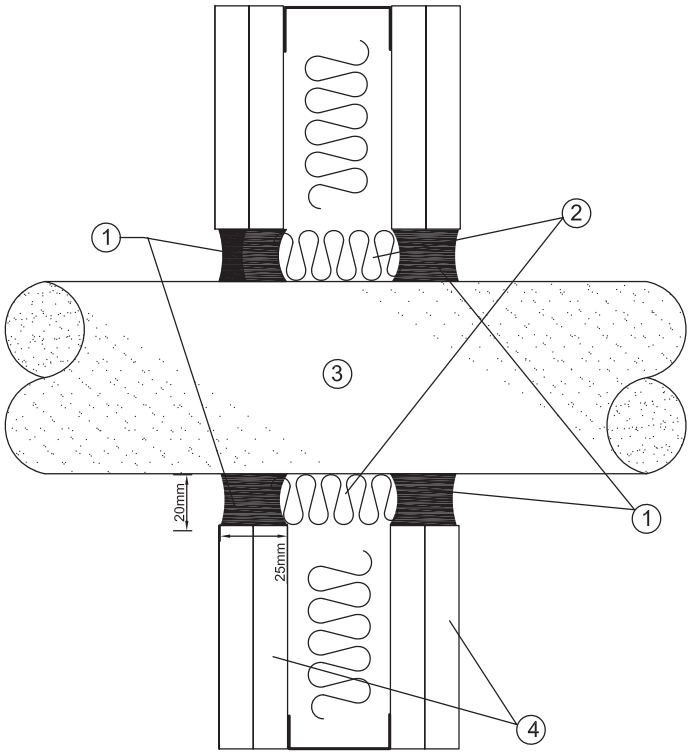

NOTES
1 - ASTRO HPE SEALANT
2 - PE BACKING ROD OR STONE WOOL 80kg DENSITY
3 - PLASTIC PIPE
4 - FLEXIBLE WALL CONSTRUCTION

ASTROFLAME MANUFACTURERS OF PASSIVE FIRE STOP PRODUCTS	Astroflame (Fireseals) Ltd Intumescent House Unit 8 The IO Centre Stephenson Road Segensworth Fareham, PO15 5RU	FILE NAME: DET 26-0018 DATE: 20/05/14	ASTROFLAME has provided this specification on the basis of data, information & site conditions given to ASTROFLAME by the client, the respective ASTROFLAME product information & the existing level of technical knowledge. This specification relates to the expected performance of the proposed detail, were it to be subjected to the standardised test against which the judgement was made. The accuracy of this specification can only be guaranteed provided: 1. Only original ASTROFLAME products as defined within this specification are used 2. These specific products are used & installed only by a competant, experienced installer & by strictly obeying the conditions & calculations mentioned in this specification, as well as all relevent technical instructions, operating manuals, setting manuals, installation manuals & all other ASTROFLAME data sheets. 3. The proposed performance, listed prerequisities & criteria conform with actual existing site conditions & have been checked & agreed by the installer & client.

TECHNICAL DATA SHEET

ASTRO HPE SEALANT®

ETA 14-0096

CE-1121-CPR-JA5024

Unique identification code of product-type: AFHPE

DESIGN TO ETA14-0096 & CE 1121-CPR-JA5024 ASTRO HPE SEALANT IN A FIRE RESISTANT SEAL AROUND PLASTIC PIPES IN A RIGID WALL CONSTRUCTION

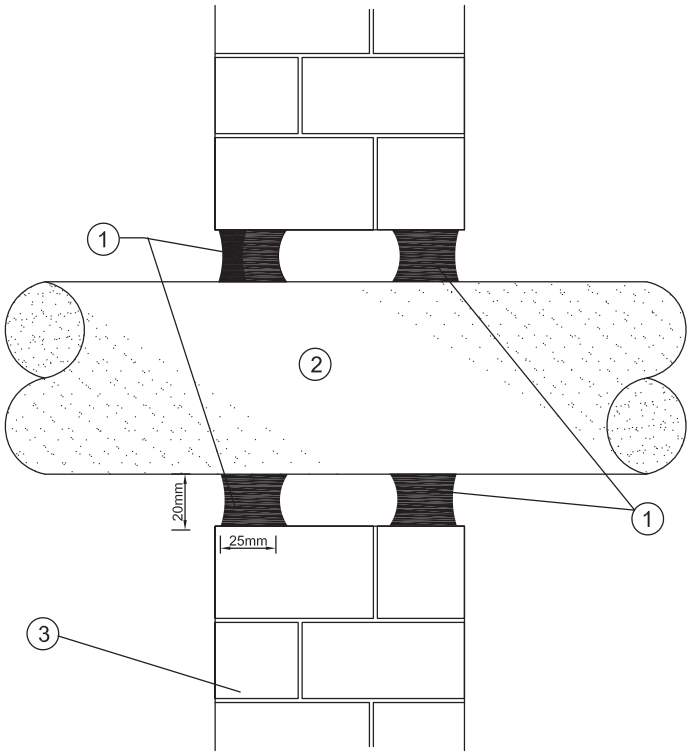

NOTES
1 - ASTRO HPE SEALANT TO A DEPTH OF 25mm
2 - COMBUSTIBLE / PLASTIC PIPE
3 - RIGID WALL CONSTRUCTION
** NO BACKING MATERIAL REQUIRED UP TO 125mm

ASTROFLAME MANUFACTURERS OF PASSIVE FIRE STOP PRODUCTS	Astroflame (Fireseals) Ltd Intumescent House Unit 8 The IO Centre Stephenson Road Segensworth Fareham, PO15 5RU	FILE NAME: DET 26-0019 DATE: 20/05/14	ASTROFLAME has provided this specification on the basis of data, information & site conditions given to ASTROFLAME by the client, the respective ASTROFLAME product information & the existing level of technical knowledge. This specification relates to the expected performance of the proposed detail, were it to be subjected to the standardised test against which the judgement was made. The accuracy of this specification can only be guaranteed provided: 1. Only original ASTROFLAME products as defined within this specification are used 2. These specific products are used & installed only by a competant, experienced installer & by strictly obeying the conditions & calculations mentioned in this specification, as well as all relevent technical instructions, operating manuals, setting manuals, installation manuals & all other ASTROFLAME data sheets. 3. The proposed performance, listed prerequisities & criteria conform with actual existing site conditions & have been checked & agreed by the installer & client.

TECHNICAL DATA SHEET

ASTRO HPE SEALANT®

ETA 14-0096

CE-1121-CPR-JA5024

Unique identification code of product-type: AFHPE

DESIGN TO ETA14-0096 & CE 1121-CPR-JA5024 ASTRO HPE SEALANT IN A FIRE RESISTANT SEAL AROUND PLASTIC PIPES IN A RIGID WALL CONSTRUCTION

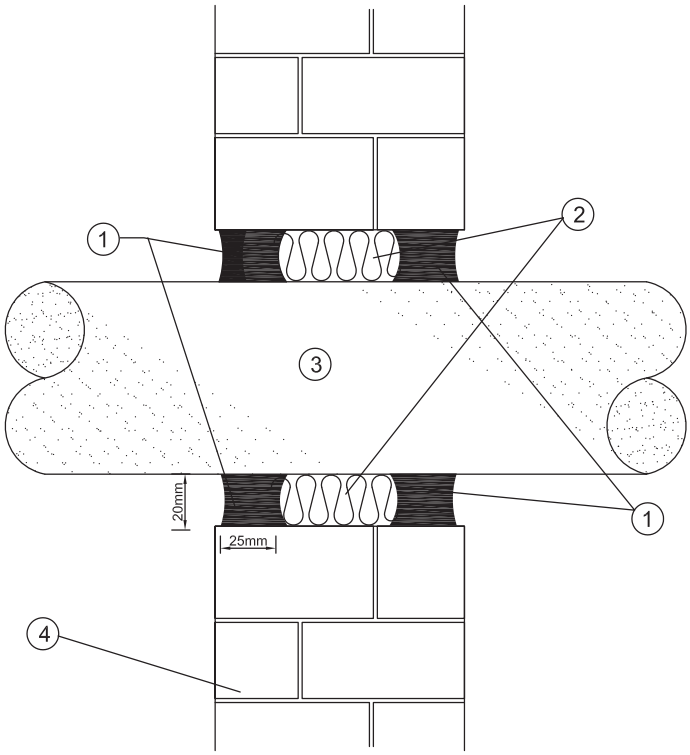

NOTES
1 - ASTRO HPE SEALANT TO A DEPTH OF 25mm
2 - PE BACKING ROD OR STONE WOOL 80kg DENSITY
3 - COMBUSTIBLE / PLASTIC PIPE
4 - RIGID WALL CONSTRUCTION

ASTROFLAME MANUFACTURERS OF PASSIVE FIRE STOP PRODUCTS	Astroflame (Fireseals) Ltd Intumescent House Unit 8 The IO Centre Stephenson Road Segensworth Fareham, PO15 5RU	FILE NAME: DET 26-0017 DATE: 20/05/14	ASTROFLAME has provided this specification on the basis of data, information & site conditions given to ASTROFLAME by the client, the respective ASTROFLAME product information & the existing level of technical knowledge. This specification relates to the expected performance of the proposed detail, were it to be subjected to the standardised test against which the judgement was made. The accuracy of this specification can only be guaranteed provided: 1. Only original ASTROFLAME products as defined within this specification are used 2. These specific products are used & installed only by a competant, experienced installer & by strictly obeying the conditions & calculations mentioned in this specification, as well as all relevent technical instructions, operating manuals, setting manuals, installation manuals & all other ASTROFLAME data sheets. 3. The proposed performance, listed prerequisities & criteria conform with actual existing site conditions & have been checked & agreed by the installer & client.

TECHNICAL DATA SHEET

ASTRO HPE SEALANT®

ETA 14-0096

CE-1121-CPR-JA5024

Unique identification code of product-type: AFHPE

DESIGN TO ETA 14-0096 & CE 1121-CPR-JA5024 ASTRO HPE SEALANT IN A FIRE RESISTANT SEAL AROUND CABLES THROUGH A FLEXIBLE WALL CONSTRUCTION

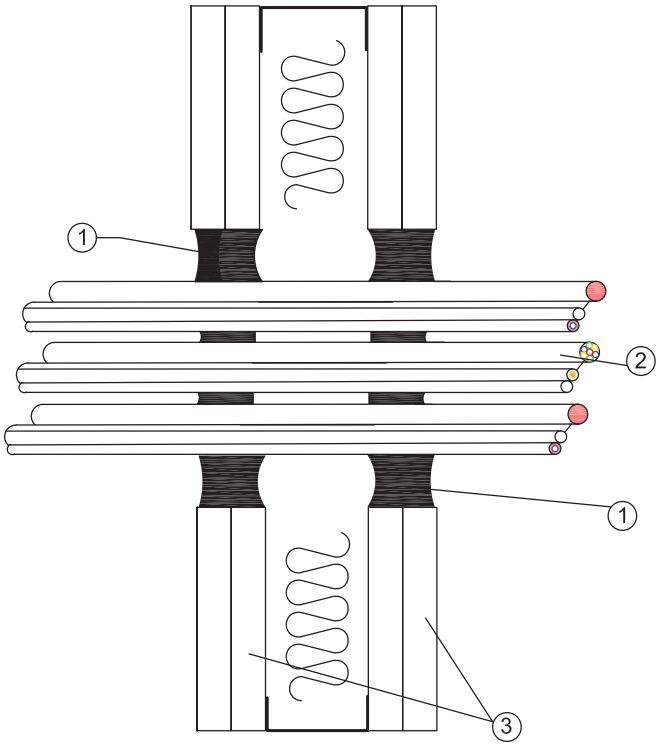

NOTES
1 - ASTRO HPE SEALANT
2 - CABLES
3 - FLEXIBLE WALL CONSTRUCTION

ASTROFLAME MANUFACTURERS OF PASSIVE FIRE STOP PRODUCTS	Astroflame (Fireseals) Ltd Intumescent House Unit 8 The IO Centre Stephenson Road Segensworth Fareham, PO15 5RU	FILE NAME: DET 26-0041 DATE: 20/05/14	ASTROFLAME has provided this specification on the basis of data, information & site conditions given to ASTROFLAME by the client, the respective ASTROFLAME product information & the existing level of technical knowledge. This specification relates to the expected performance of the proposed detail, were it to be subjected to the standardised test against which the judgement was made. The accuracy of this specification can only be guaranteed provided: 1. Only original ASTROFLAME products as defined within this specification are used 2. These specific products are used & installed only by a competant, experienced installer & by strictly obeying the conditions & calculations mentioned in this specification, as well as all relevent technical instructions, operating manuals, setting manuals, installation manuals & all other ASTROFLAME data sheets. 3. The proposed performance, listed prerequisities & criteria conform with actual existing site conditions & have been checked & agreed by the installer & client.

TECHNICAL DATA SHEET

ASTRO HPE SEALANT®

ETA 14-0096

CE-1121-CPR-JA5024

Unique identification code of product-type: AFHPE

DESIGN TO ETA 14-0096 & CE 1121-CPR-JA5024 ASTRO HPE SEALANT IN A FIRE RESISTANT SEAL AROUND CABLES THROUGH A FLEXIBLE WALL CONSTRUCTION

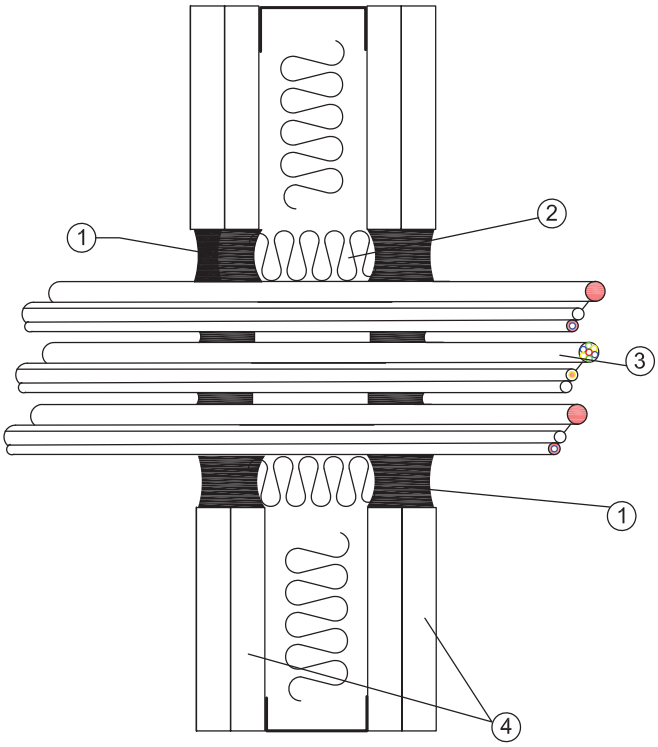

NOTES
1 - ASTRO HPE SEALANT
2 - PE BACKING ROD OR STONE WOOL 80kg DENSITY
3 - CABLES
4 - FLEXIBLE WALL CONSTRUCTION

ASTROFLAME MANUFACTURERS OF PASSIVE FIRE STOP PRODUCTS	Astroflame (Fireseals) Ltd Intumescent House Unit 8 The IO Centre Stephenson Road Segensworth Fareham, PO15 5RU	FILE NAME: DET 26-0037 DATE: 20/05/14	ASTROFLAME has provided this specification on the basis of data, information & site conditions given to ASTROFLAME by the client, the respective ASTROFLAME product information & the existing level of technical knowledge. This specification relates to the expected performance of the proposed detail, were it to be subjected to the standardised test against which the judgement was made. The accuracy of this specification can only be guaranteed provided: 1. Only original ASTROFLAME products as defined within this specification are used 2. These specific products are used & installed only by a competant, experienced installer & by strictly obeying the conditions & calculations mentioned in this specification, as well as all relevent technical instructions, operating manuals, setting manuals, installation manuals & all other ASTROFLAME data sheets. 3. The proposed performance, listed prerequisities & criteria conform with actual existing site conditions & have been checked & agreed by the installer & client.

TECHNICAL DATA SHEET

ASTRO HPE SEALANT®

ETA 14-0096

CE-1121-CPR-JA5024

Unique identification code of product-type: AFHPE

DESIGN TO ETA 14-0096 & CE 1121-CPR-JA5024 ASTRO HPE SEALANT IN A FIRE RESISTANT SEAL AROUND CABLES & PLASTIC PIPE THROUGH A FLEXIBLE WALL CONSTRUCTION

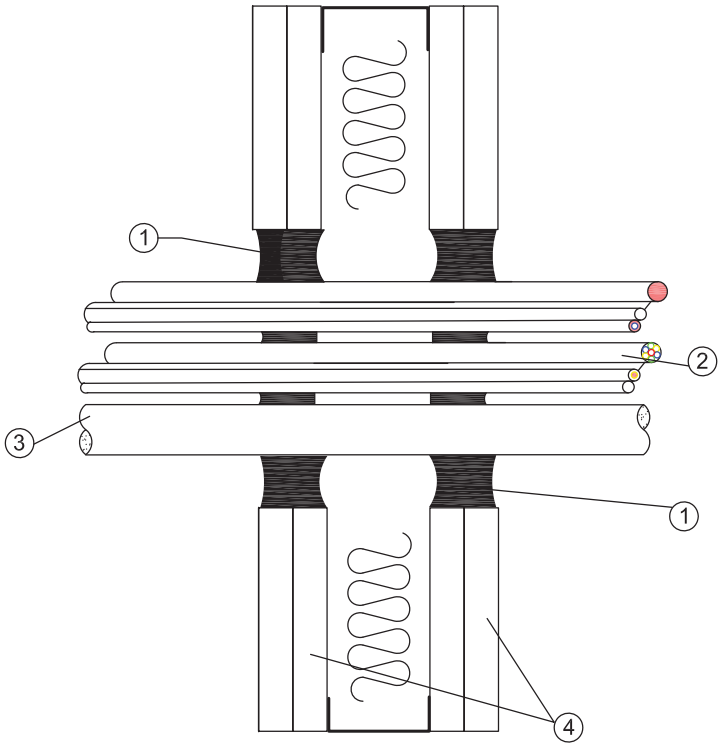

NOTES
1 - ASTRO HPE SEALANT
2 - CABLES
3 - PLASTIC PIPE
4 - FLEXIBLE WALL CONSTRUCTION

ASTROFLAME MANUFACTURERS OF PASSIVE FIRE STOP PRODUCTS	Astroflame (Fireseals) Ltd Intumescent House Unit 8 The IO Centre Stephenson Road Segensworth Fareham, PO15 5RU	FILE NAME: DET 26-0042 DATE: 20/05/14	ASTROFLAME has provided this specification on the basis of data, information & site conditions given to ASTROFLAME by the client, the respective ASTROFLAME product information & the existing level of technical knowledge. This specification relates to the expected performance of the proposed detail, were it to be subjected to the standardised test against which the judgement was made. The accuracy of this specification can only be guaranteed provided: 1. Only original ASTROFLAME products as defined within this specification are used 2. These specific products are used & installed only by a competant, experienced installer & by strictly obeying the conditions & calculations mentioned in this specification, as well as all relevent technical instructions, operating manuals, setting manuals, installation manuals & all other ASTROFLAME data sheets. 3. The proposed performance, listed prerequisities & criteria conform with actual existing site conditions & have been checked & agreed by the installer & client.

TECHNICAL DATA SHEET

ASTRO HPE SEALANT®

ETA 14-0096

CE-1121-CPR-JA5024

Unique identification code of product-type: AFHPE

DESIGN TO ETA 14-0096 & CE 1121-CPR-JA5024 ASTRO HPE SEALANT IN A FIRE RESISTANT SEAL AROUND CABLES & PLASTIC PIPE THROUGH A FLEXIBLE WALL CONSTRUCTION

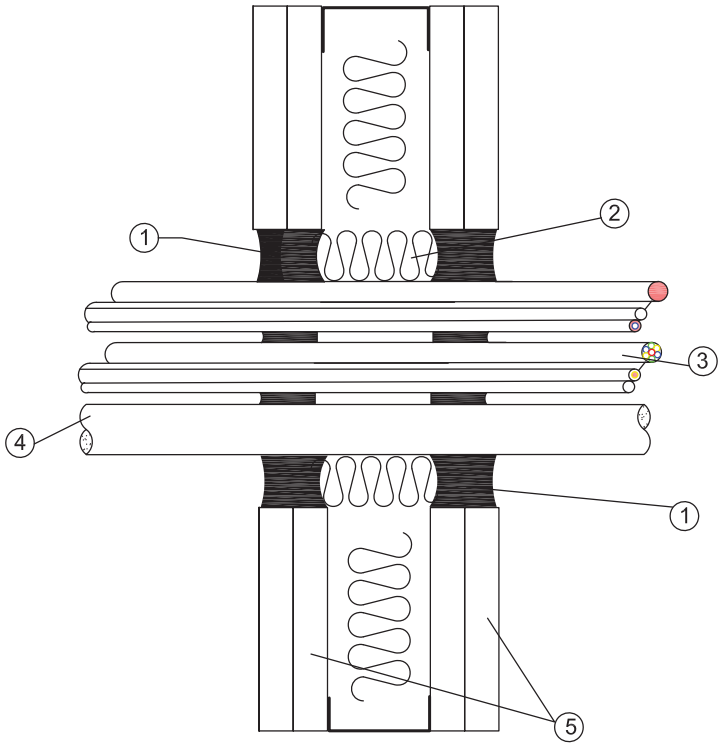

NOTES
1 - ASTRO HPE SEALANT
2 - PE BACKING ROD OR STONE WOOL 80kg DENSITY
3 - CABLES
4 - PLASTIC PIPE
5 - FLEXIBLE WALL CONSTRUCTION

ASTROFLAME MANUFACTURERS OF PASSIVE FIRE STOP PRODUCTS	Astroflame (Fireseals) Ltd Intumescent House Unit 8 The IO Centre Stephenson Road Segensworth Fareham, PO15 5RU	FILE NAME: DET 26-0038 DATE: 20/05/14	ASTROFLAME has provided this specification on the basis of data, information & site conditions given to ASTROFLAME by the client, the respective ASTROFLAME product information & the existing level of technical knowledge. This specification relates to the expected performance of the proposed detail, were it to be subjected to the standardised test against which the judgement was made. The accuracy of this specification can only be guaranteed provided: 1. Only original ASTROFLAME products as defined within this specification are used 2. These specific products are used & installed only by a competant, experienced installer & by strictly obeying the conditions & calculations mentioned in this specification, as well as all relevent technical instructions, operating manuals, setting manuals, installation manuals & all other ASTROFLAME data sheets. 3. The proposed performance, listed prerequisities & criteria conform with actual existing site conditions & have been checked & agreed by the installer & client.

TECHNICAL DATA SHEET

ASTRO HPE SEALANT®

ETA 14-0096

CE-1121-CPR-JA5024

Unique identification code of product-type: AFHPE

DESIGN TO ETA 14-0096 & CE 1121-CPR-JA5024 ASTRO HPE SEALANT IN A FIRE RESISTANT SEAL AROUND CABLES THROUGH A RIGID WALL CONSTRUCTION

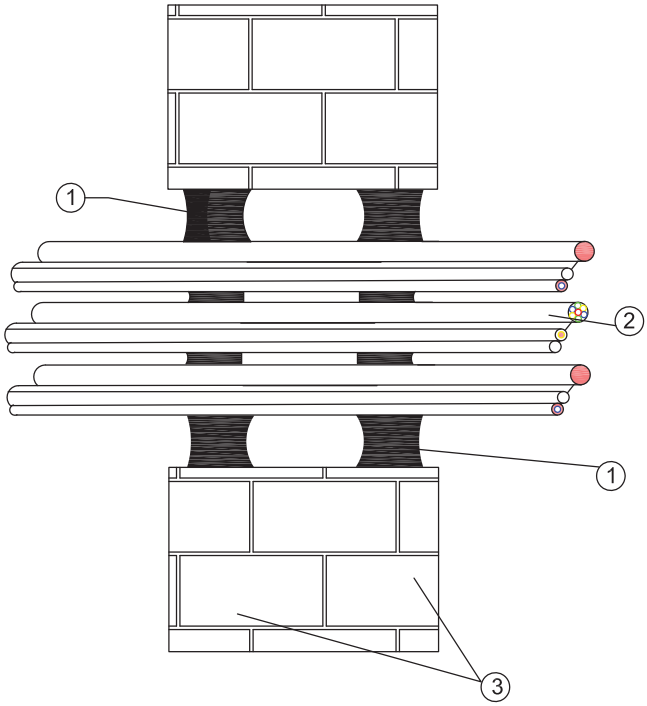

NOTES
1 - ASTRO HPE SEALANT
2- CABLES
3 - RIGID WALL CONSTRUCTION

ASTROFLAME MANUFACTURERS OF PASSIVE FIRE STOP PRODUCTS	Astroflame (Fireseals) Ltd Intumescent House Unit 8 The IO Centre Stephenson Road Segensworth Fareham, PO15 5RU	FILE NAME: DET 26-0043 DATE: 20/05/14	ASTROFLAME has provided this specification on the basis of data, information & site conditions given to ASTROFLAME by the client, the respective ASTROFLAME product information & the existing level of technical knowledge. This specification relates to the expected performance of the proposed detail, were it to be subjected to the standardised test against which the judgement was made. The accuracy of this specification can only be guaranteed provided: 1. Only original ASTROFLAME products as defined within this specification are used 2. These specific products are used & installed only by a competant, experienced installer & by strictly obeying the conditions & calculations mentioned in this specification, as well as all relevent technical instructions, operating manuals, setting manuals, installation manuals & all other ASTROFLAME data sheets. 3. The proposed performance, listed prerequisities & criteria conform with actual existing site conditions & have been checked & agreed by the installer & client.

TECHNICAL DATA SHEET

ASTRO HPE SEALANT®

ETA 14-0096

CE-1121-CPR-JA5024

Unique identification code of product-type: AFHPE

DESIGN TO ETA 14-0096 & CE 1121-CPR-JA5024 ASTRO HPE SEALANT IN A FIRE RESISTANT SEAL AROUND CABLES & PLASTIC PIPE THROUGH A RIGID WALL CONSTRUCTION

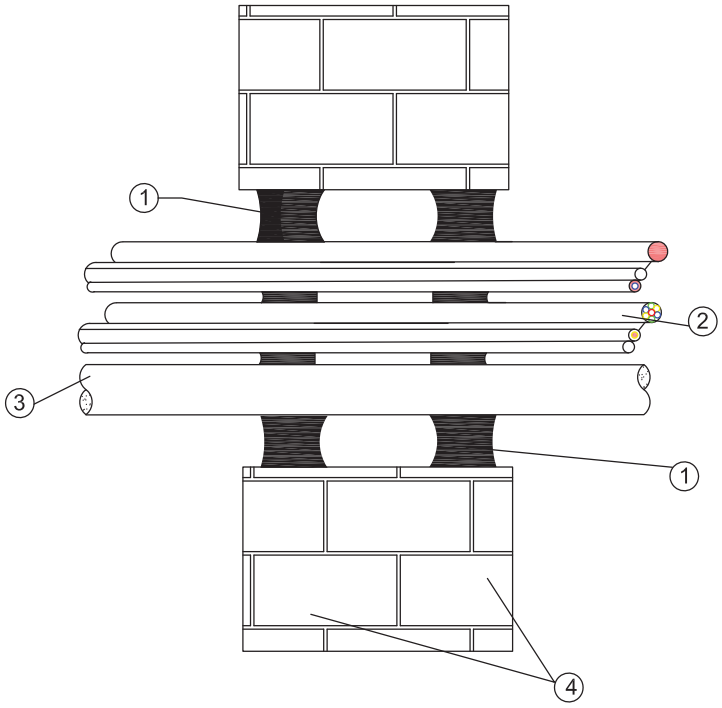

NOTES
1 - ASTRO HPE SEALANT
2 - CABLES
3 - PLASTIC PIPE
4 - RIGID WALL CONSTRUCTION

ASTROFLAME MANUFACTURERS OF PASSIVE FIRE STOP PRODUCTS	Astroflame (FIreseals) Ltd Intumescent House Unit 8 The IO Centre Stephenson Road Segensworth Fareham, PO15 5RU	FILE NAME: DET 26-0044 DATE: 20/05/14	ASTROFLAME has provided this specification on the basis of data, information & site conditions given to ASTROFLAME by the client, the respective ASTROFLAME product information & the existing level of technical knowledge. This specification relates to the expected performance of the proposed detail, were it to be subjected to the standardised test against which the judgement was made. The accuracy of this specification can only be guaranteed provided: 1. Only original ASTROFLAME products as defined within this specification are used 2. These specific products are used & installed only by a competant, experienced installer & by strictly obeying the conditions & calculations mentioned in this specification, as well as all relevent technical instructions, operating manuals, setting manuals, installation manuals & all other ASTROFLAME data sheets. 3. The proposed performance, listed prerequisities & criteria conform with actual existing site conditions & have been checked & agreed by the installer & client.

TECHNICAL DATA SHEET

ASTRO HPE SEALANT®

ETA 14-0096

CE-1121-CPR-JA5024

Unique identification code of product-type: AFHPE

DESIGN TO ETA 14-0096 & CE 1121-CPR-JA5024 ASTRO HPE SEALANT IN A FIRE RESISTANT SEAL AROUND CABLES THROUGH A RIGID WALL CONSTRUCTION

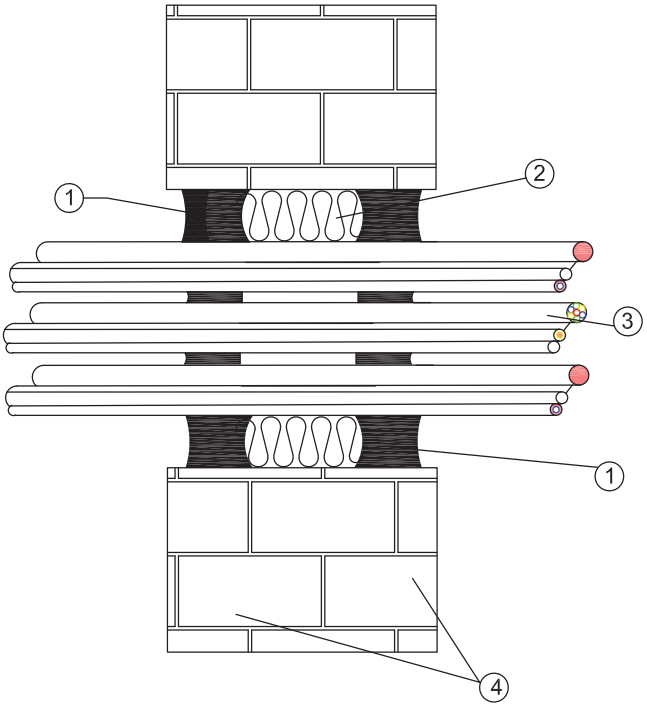

NOTES
1 - ASTRO HPE SEALANT
2 - PE BACKING ROD OR STONE WOOL 80kg DENSITY
3 - CABLES
4 - RIGID WALL CONSTRUCTION

ASTROFLAME MANUFACTURERS OF PASSIVE FIRE STOP PRODUCTS	Astroflame (FIreseals) Ltd Intumescent House Unit 8 The IO Centre Stephenson Road Segensworth Fareham, PO15 5RU	FILE NAME: DET 26-0039 DATE: 20/05/14	ASTROFLAME has provided this specification on the basis of data, information & site conditions given to ASTROFLAME by the client, the respective ASTROFLAME product information & the existing level of technical knowledge. This specification relates to the expected performance of the proposed detail, were it to be subjected to the standardised test against which the judgement was made. The accuracy of this specification can only be guaranteed provided: 1. Only original ASTROFLAME products as defined within this specification are used 2. These specific products are used & installed only by a competant, experienced installer & by strictly obeying the conditions & calculations mentioned in this specification, as well as all relevent technical instructions, operating manuals, setting manuals, installation manuals & all other ASTROFLAME data sheets. 3. The proposed performance, listed prerequisities & criteria conform with actual existing site conditions & have been checked & agreed by the installer & client.

TECHNICAL DATA SHEET

ASTRO HPE SEALANT®

ETA 14-0096

CE-1121-CPR-JA5024

Unique identification code of product-type: AFHPE

DESIGN TO ETA 14-0096 & CE 1121-CPR-JA5024 ASTRO HPE SEALANT IN A FIRE RESISTANT SEAL AROUND CABLES & PLASTIC PIPE THROUGH A RIGID WALL CONSTRUCTION

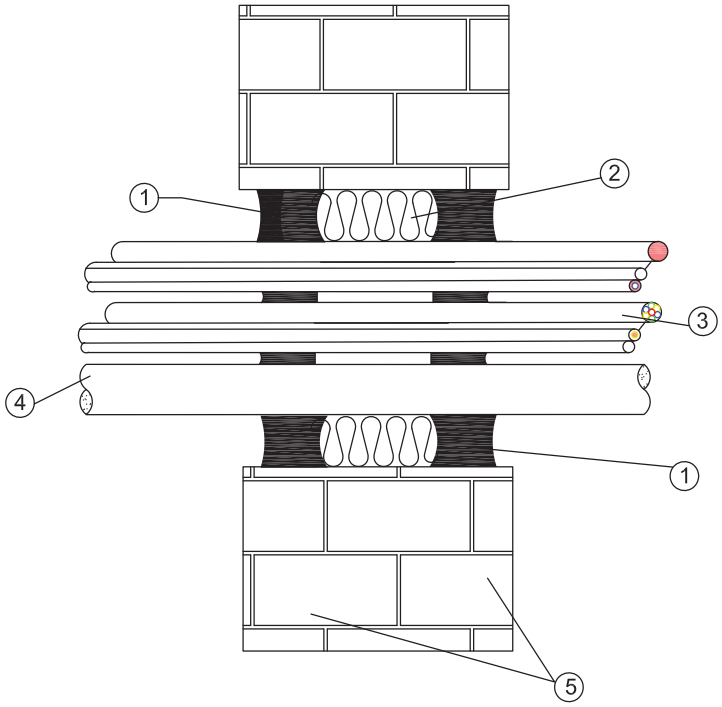

NOTES
1 - ASTRO HPE SEALANT
2 - PE BACKING ROD OR STONE WOOL 80kg DENSITY
3 - CABLES
4 - PLASTIC PIPE
5 - RIGID WALL CONSTRUCTION

ASTROFLAME MANUFACTURERS OF PASSIVE FIRE STOP PRODUCTS	Astroflame (Fireseals) Ltd Intumescent House Unit 8 The IO Centre Stephenson Road Segensworth Fareham, PO15 5RU	FILE NAME: DET 26-0040 DATE: 20/05/14	ASTROFLAME has provided this specification on the basis of data, information & site conditions given to ASTROFLAME by the client, the respective ASTROFLAME product information & the existing level of technical knowledge. This specification relates to the expected performance of the proposed detail, were it to be subjected to the standardised test against which the judgement was made. The accuracy of this specification can only be guaranteed provided: 1. Only original ASTROFLAME products as defined within this specification are used 2. These specific products are used & installed only by a competant, experienced installer & by strictly obeying the conditions & calculations mentioned in this specification, as well as all relevent technical instructions, operating manuals, setting manuals, installation manuals & all other ASTROFLAME data sheets. 3. The proposed performance, listed prerequisities & criteria conform with actual existing site conditions & have been checked & agreed by the installer & client.

TECHNICAL DATA SHEET

ASTRO HPE SEALANT®

ETA 14-0096

CE-1121-CPR-JA5024

Unique identification code of product-type: AFHPE

Flexible and Rigid wall constructions according to 1.2.1 with wall thickness of minimum 120mm

Penetration seal with Astro HPE Sealant - Insulated metallic Pipes

Penetration Specification	Astro HPE (installed both faces)	Backing Material	Classification
Copper / Steel Pipe 60mm ø 0.8mm - 14.2mm wall thickness, insulated with 32mm 'Armaflex AF' (CS) Continued Sustained	20mm annulus x 25mm deep	N/A	E120 U/C EI90 U/C
Copper / Steel Pipe 15mm ø 0.8mm - 7mm wall thickness, insulated with 13mm 'Armaflex AF' (CS) Continued Sustained	15mm annulus x 25mm deep	N/A	EI120 U/C

Astroflame Fireseals Ltd
Unit 8, The I O Centre
Stephenson Road
Segensworth, Fareham
Hampshire, PO15 5RU

Tel: +44 (0) 1329 844500
Fax: +44 (0) 1329 844600
Email: sales@astroflame.com
Website: www.astroflame.com

TECHNICAL DATA SHEET

ASTRO HPE SEALANT®

ETA 14-0096

CE-1121-CPR-JA5024

Unique identification code of product-type: AFHPE

DESIGN TO ETA 14-0096 & CE 1121-CPR-JA5024 ASTRO HPE SEALANT IN A FIRE RESISTANT SEAL AROUND METALLIC PIPES THROUGH A FLEXIBLE WALL CONSTRUCTION

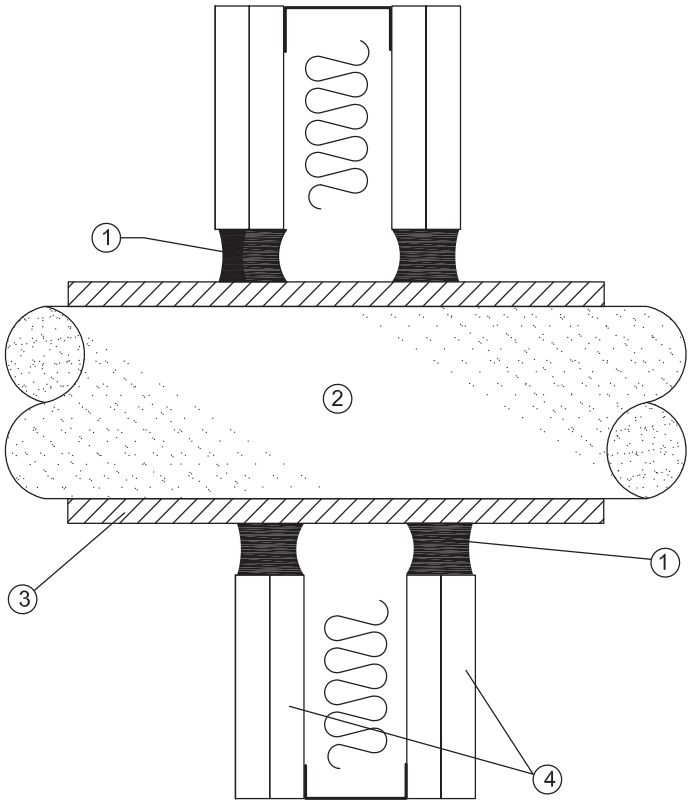

NOTES
1 - ASTRO HPE SEALANT
2 - METALLIC PIPE
3 - INSULATION MATERIAL
4 - FLEXIBLE WALL CONSTRUCTION

ASTROFLAME MANUFACTURERS OF PASSIVE FIRE STOP PRODUCTS	Astroflame (Fireseals) Ltd Intumescent House Unit 8 The IO Centre Stephenson Road Segensworth Fareham, PO15 5RU	FILE NAME: DET 26-0024 DATE: 20/05/14	ASTROFLAME has provided this specification on the basis of data, information & site conditions given to ASTROFLAME by the client, the respective ASTROFLAME product information & the existing level of technical knowledge. This specification relates to the expected performance of the proposed detail, were it to be subjected to the standardised test against which the judgement was made. The accuracy of this specification can only be guaranteed provided: 1. Only original ASTROFLAME products as defined within this specification are used 2. These specific products are used & installed only by a competant, experienced installer & by strictly obeying the conditions & calculations mentioned in this specification, as well as all relevent technical instructions, operating manuals, setting manuals, installation manuals & all other ASTROFLAME data sheets. 3. The proposed performance, listed prerequisities & criteria conform with actual existing site conditions & have been checked & agreed by the installer & client.

TECHNICAL DATA SHEET

ASTRO HPE SEALANT®

ETA 14-0096

CE-1121-CPR-JA5024

Unique identification code of product-type: AFHPE

DESIGN TO ETA 14-0096 & CE 1121-CPR-JA5024 ASTRO HPE SEALANT IN A FIRE RESISTANT SEAL AROUND METALLIC PIPES THROUGH A FLEXIBLE WALL CONSTRUCTION

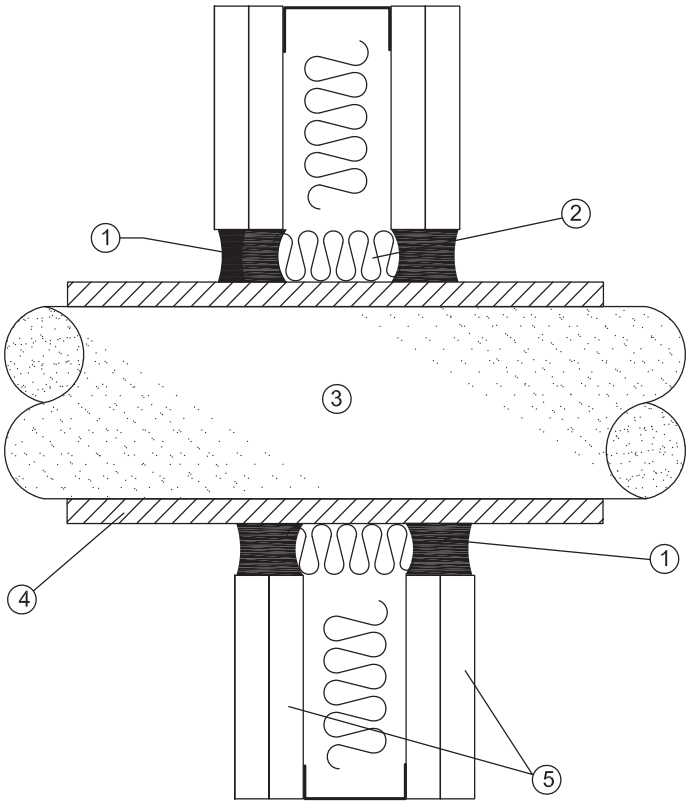

NOTES
1 - ASTRO HPE SEALANT
2 - PE BACKING ROD OR STONE WOOL 80kg DENSITY
3 - METALLIC PIPE
4 - INSULATION MATERIAL
5 - FLEXIBLE WALL CONSTRUCTION

ASTROFLAME MANUFACTURERS OF PASSIVE FIRE STOP PRODUCTS	Astroflame (Fireseals) Ltd Intumescent House Unit 8 The IO Centre Stephenson Road Segensworth Fareham, PO15 5RU	FILE NAME: DET 26-0022 DATE: 20/05/14	ASTROFLAME has provided this specification on the basis of data, information & site conditions given to ASTROFLAME by the client, the respective ASTROFLAME product information & the existing level of technical knowledge. This specification relates to the expected performance of the proposed detail, were it to be subjected to the standardised test against which the judgement was made. The accuracy of this specification can only be guaranteed provided: 1. Only original ASTROFLAME products as defined within this specification are used 2. These specific products are used & installed only by a competant, experienced installer & by strictly obeying the conditions & calculations mentioned in this specification, as well as all relevent technical instructions, operating manuals, setting manuals, installation manuals & all other ASTROFLAME data sheets. 3. The proposed performance, listed prerequisities & criteria conform with actual existing site conditions & have been checked & agreed by the installer & client.

TECHNICAL DATA SHEET

ASTRO HPE SEALANT®

ETA 14-0096

CE-1121-CPR-JA5024

Unique identification code of product-type: AFHPE

DESIGN TO ETA14-0096 & CE 1121-CPR-JA5024 ASTRO HPE SEALANT IN A FIRE RESISTANT SEAL AROUND METALLIC PIPES IN A RIGID WALL CONSTRUCTION

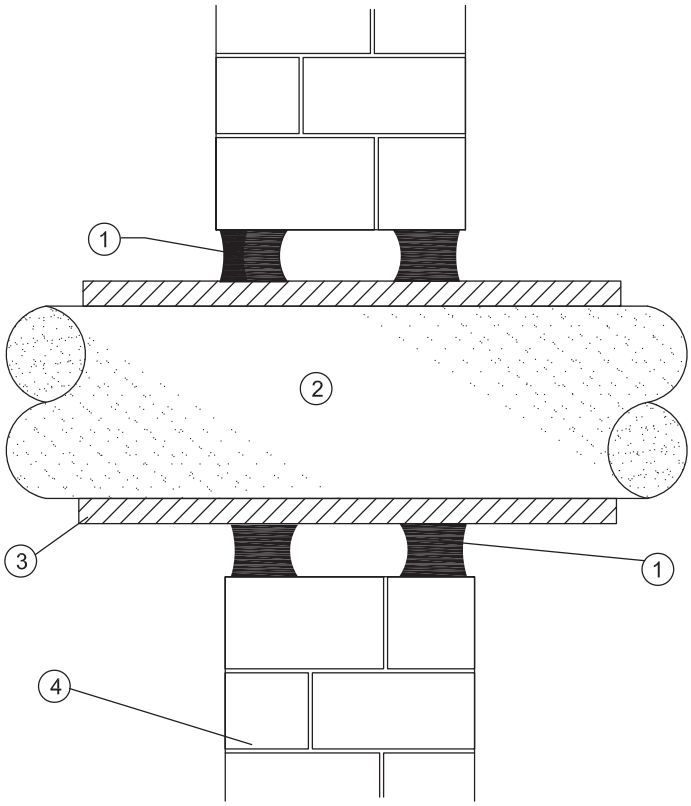

NOTES
1 - ASTRO HPE SEALANT TO A DEPTH OF 25mm
2 - METALLIC PIPE
3 - INSULATION MATERIAL
4 - RIGID WALL CONSTRUCTION

ASTROFLAME MANUFACTURERS OF PASSIVE FIRE STOP PRODUCTS	Astroflame (Fireseals) Ltd Intumescent House Unit 8 The IO Centre Stephenson Road Segensworth Fareham, PO15 5RU	FILE NAME: DET 26-0023 DATE: 20/05/14	ASTROFLAME has provided this specification on the basis of data, information & site conditions given to ASTROFLAME by the client, the respective ASTROFLAME product information & the existing level of technical knowledge. This specification relates to the expected performance of the proposed detail, were it to be subjected to the standardised test against which the judgement was made. The accuracy of this specification can only be guaranteed provided: 1. Only original ASTROFLAME products as defined within this specification are used 2. These specific products are used & installed only by a competant, experienced installer & by strictly obeying the conditions & calculations mentioned in this specification, as well as all relevent technical instructions, operating manuals, setting manuals, installation manuals & all other ASTROFLAME data sheets. 3. The proposed performance, listed prerequisities & criteria conform with actual existing site conditions & have been checked & agreed by the installer & client.

TECHNICAL DATA SHEET

ASTRO HPE SEALANT®

ETA 14-0096

CE-1121-CPR-JA5024

Unique identification code of product-type: AFHPE

DESIGN TO ETA14-0096 & CE 1121-CPR-JA5024 ASTRO HPE SEALANT IN A FIRE RESISTANT SEAL AROUND METALLIC PIPES IN A RIGID WALL CONSTRUCTION

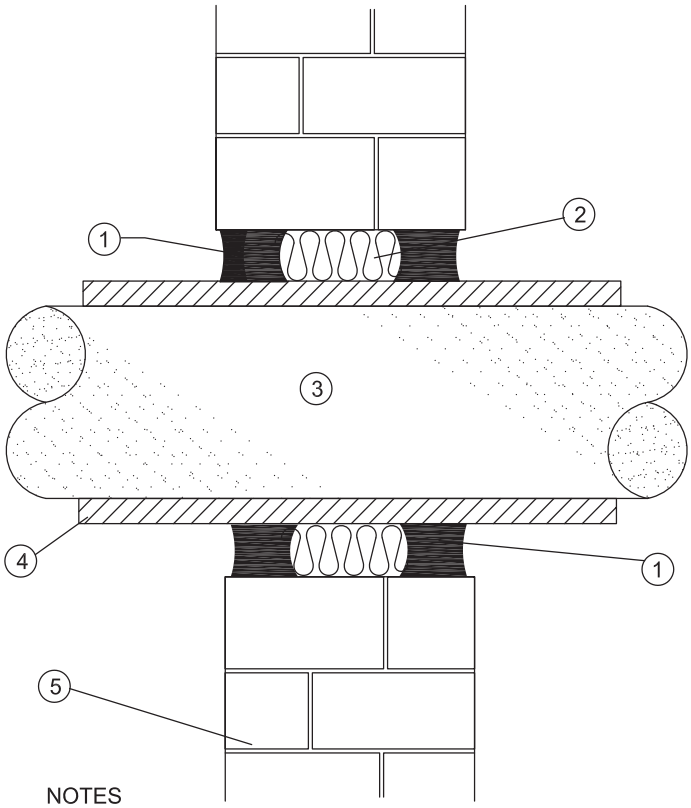

NOTES

1 - ASTRO HPE SEALANT TO A DEPTH OF 25mm
2 - PE BACKING ROD OR STONE WOOL 80kg DENSITY
3 - METALLIC PIPE
4 - INSULATION MATERIAL
5 - RIGID WALL CONSTRUCTION

ASTROFLAME MANUFACTURERS OF PASSIVE FIRE STOP PRODUCTS	Astroflame (Fireseals) Ltd Intumescent House Unit 8 The IO Centre Stephenson Road Segensworth Fareham, PO15 5RU	FILE NAME: DET 26-0021 DATE: 20/05/14	ASTROFLAME has provided this specification on the basis of data, information & site conditions given to ASTROFLAME by the client, the respective ASTROFLAME product information & the existing level of technical knowledge. This specification relates to the expected performance of the proposed detail, were it to be subjected to the standardised test against which the judgement was made. The accuracy of this specification can only be guaranteed provided: 1. Only original ASTROFLAME products as defined within this specification are used 2. These specific products are used & installed only by a competant, experienced installer & by strictly obeying the conditions & calculations mentioned in this specification, as well as all relevent technical instructions, operating manuals, setting manuals, installation manuals & all other ASTROFLAME data sheets. 3. The proposed performance, listed prerequisities & criteria conform with actual existing site conditions & have been checked & agreed by the installer & client.

TECHNICAL DATA SHEET

ASTRO HPE SEALANT®

ETA 14-0096
CE-1121-CPR-JA5024

Unique identification code of product-type: AFHPE

SEC 3

Flexible and Rigid wall constructions according to 1.2.1 with wall thickness of minimum 100mm

Penetration seal with Astro HPE Sealant - Plastic Pipes Uponor fitting

Penetration Specification	Astro HPE (installed both faces)	Backing Material	Classification
PVC Pipe 40mm ø 1.9mm wall thickness	20mm annulus x 25mm deep	N/A	EI120 U/C
PVC Pipe 125mm ø 9.2mm wall thickness	20mm annulus x 25mm deep	N/A	EI60 U/C
ABS Pipe 40mm ø 1.9mm wall thickness	20mm annulus x 25mm deep	N/A	EI120 U/C
HDPP Pipe 40mm ø 2mm wall thickness	20mm annulus x 25mm deep	N/A	EI120 U/C

Flexible and Rigid wall constructions according to 1.2.1 with wall thickness of minimum 100mm

Penetration seal with Astro HPE Sealant - Plastic Pipes Uponor fitting

Penetration Specification	Astro HPE (installed both faces)	Backing Material	Classification
Copper / Steel Pipe 40mm ø 1.5mm - 14.2mm wall thickness insulated with 32mm 'Armaflex AF' (LS 650mm) Local Sustained 650mm	20mm annulus x 25mm deep	N/A	E120 C/U EI30 C/U
Copper / Steel Pipe 40mm - 159mm ø 2.0mm - 14.2mm wall thickness insulated with 32mm 'Armaflex AF' (LS 650mm) Local Sustained 650mm	20mm annulus x 25mm deep	N/A	E120 C/U EI30 C/U
Copper / Steel Pipe 40mm - 159mm ø 2.0mm - 14.2mm wall thickness insulated with 32mm 'Armaflex AF' (LS 650mm) Local Sustained 650mm	20mm annulus x 25mm deep	N/A	E120 C/U EI30 C/U

Flexible and Rigid wall constructions according to 1.2.1 with wall thickness of minimum 100mm

Penetration seal with Astro Batt and Astro HPE Sealant installed centrally within the wall

Penetration Specification Mild Steel or Copper	Astro HPE (installed both faces)	Backing Material	Classification
40mm diameter and 1.5 - 14.2mm wall	20mm thick foil faced glass wool insulation (min 80kg/m^3)	15mm deep x 15mm wide annulus Astro HPE Sealant to both faces of the seal	E90 U/C EI60 U/C
40 - 159mm diameter and 2.3 - 14.2mm wall	30mm thick foil faced glass wool insulation (min 80kg/m^3)		EI60 U/C

TECHNICAL DATA SHEET

ASTRO HPE SEALANT®

ETA 14-0096
CE-1121-CPR-JA5024

Unique identification code of product-type: AFHPE

Penetration Specification Mild Steel or Copper	Astro HPE (installed both faces)	Backing Material	Classification
40mm diameter and 1.7 - 14.2mm wall	20mm thick foil faced glass wool insulation (min 80kg/m³)	15mm deep x 15mm wide annulus Astro HPE Sealant to both faces of the seal	E90 U/C EI60 U/C
40 - 150mm diameter and 2.3 - 14.2mm wall	30mm thick foil faced glass wool insulation (min 80kg/m³)		EI60 U/C

DESIGN TO ETA 14-0099 & CE 1121-CPR-JA5025 ASTRO HPE SEALANT IN A FIRE RESISTANT SEAL AROUND AN INSULATED METALLIC PIPE IN ASTRO BATT SYSTEM THROUGH FLEXIBLE WALL CONSTRUCTION

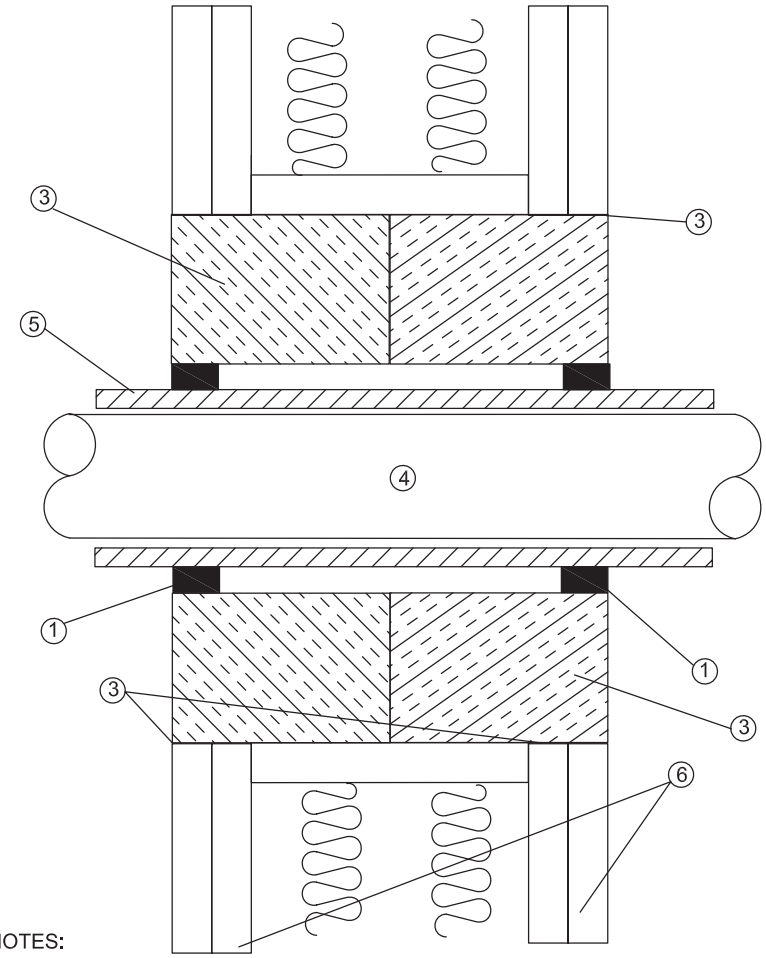

NOTES:
1 - ASTROHPE SEALANT
2 - ASTRO BATT
3 - ASTRO INTU MASTIC
4 - METALLIC PIPE
5 - INSULATION MATERIAL
6 - FLEXIBLE WALL CONSTRUCTION

ASTROFLAME MANUFACTURERS OF PASSIVE FIRE STOP PRODUCTS	Astroflame (Fireseals) Ltd Intumescent House Unit 8 The IO Centre Stephenson Road Segensworth Fareham, PO15 5RU	FILE NAME: DET 26-0028 DATE: 20/05/14	ASTROFLAME has provided this specification on the basis of data, information & site conditions given to ASTROFLAME by the client, the respective ASTROFLAME product information & the existing level of technical knowledge. This specification relates to the expected performance of the proposed detail, were it to be subjected to the standardised test against which the judgement was made. The accuracy of this specification can only be guaranteed provided: 1. Only original ASTROFLAME products as defined within this specification are used 2. These specific products are used & installed only by a competant, experienced installer & by strictly obeying the conditions & calculations mentioned in this specification, as well as all relevent technical instructions, operating manuals, setting manuals, installation manuals & all other ASTROFLAME data sheets. 3. The proposed performance, listed prerequisities & criteria conform with actual existing site conditions & have been checked & agreed by the installer & client.

TECHNICAL DATA SHEET

ASTRO HPE SEALANT®

ETA 14-0096

CE-1121-CPR-JA5024

Unique identification code of product-type: AFHPE

DESIGN TO ETA 14-0099 & CE 1121-CPR-JA5026 ASTRO HPE SEALANT IN A FIRE RESISTANT SEAL AROUND AN INSULATED METALLIC PIPE IN ASTRO BATT SYSTEM THROUGH FLEXIBLE WALL CONSTRUCTION

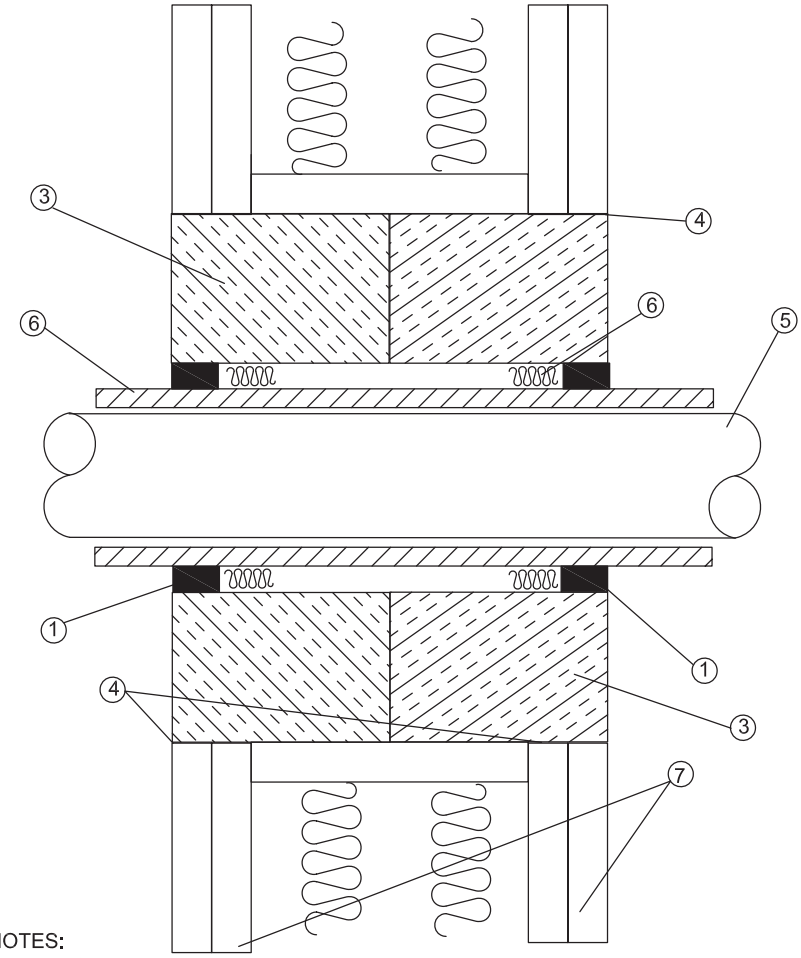

NOTES:
1 - ASTRO HPE SEALANT
2 - PE BACKING ROD OR STONE WOOL 80kg DENSITY
3 - ASTRO BATT
4 - ASTRO INTU MASTIC
5 - METALLIC PIPE
6 - INSULATION MATERIAL
7 - FLEXIBLE WALL CONSTRUCTION

ASTROFLAME MANUFACTURERS OF PASSIVE FIRE STOP PRODUCTS	Astroflame (Fireseals) Ltd Intumescent House Unit 8 The IO Centre Stephenson Road Segensworth Fareham, PO15 5RU	FILE NAME: DET 26-0026 DATE: 20/05/14	ASTROFLAME has provided this specification on the basis of data, information & site conditions given to ASTROFLAME by the client, the respective ASTROFLAME product information & the existing level of technical knowledge. This specification relates to the expected performance of the proposed detail, were it to be subjected to the standardised test against which the judgement was made. The accuracy of this specification can only be guaranteed provided: 1. Only original ASTROFLAME products as defined within this specification are used 2. These specific products are used & installed only by a competant, experienced installer & by strictly obeying the conditions & calculations mentioned in this specification, as well as all relevent technical instructions, operating manuals, setting manuals, installation manuals & all other ASTROFLAME data sheets. 3. The proposed performance, listed prerequisities & criteria conform with actual existing site conditions & have been checked & agreed by the installer & client.

TECHNICAL DATA SHEET

ASTRO HPE SEALANT®

ETA 14-0096

CE-1121-CPR-JA5024

Unique identification code of product-type: AFHPE

DESIGN TO ETA14-0099 & CE 1121-CPR-JA5026 ASTRO HPE SEALANT IN A FIRE RESISTANT SEAL AROUND METALLIC PIPES IN A ASTRO BATT SYSTEM WITHIN A RIGID WALL CONSTRUCTION

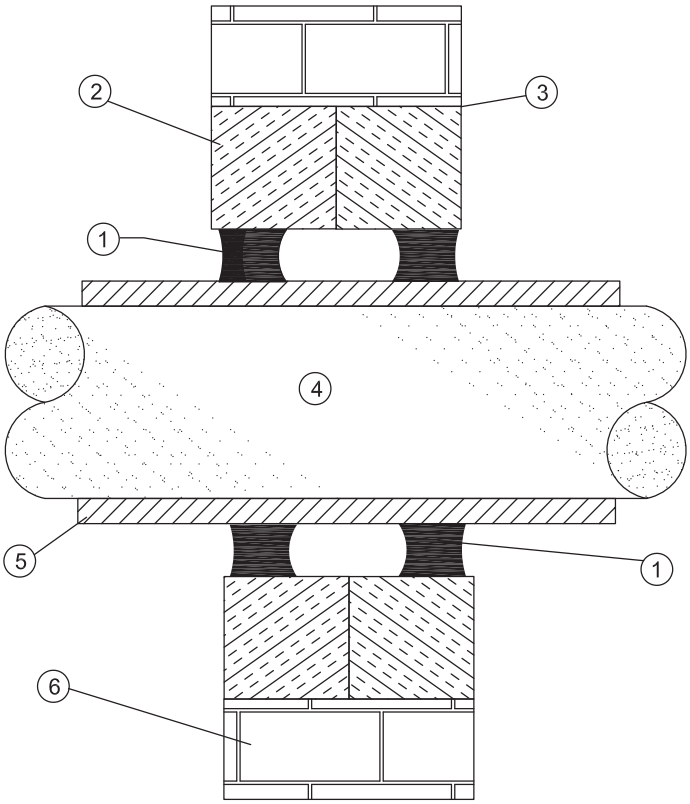

NOTES
1 - ASTRO HPE SEALANT TO A DEPTH OF 25mm
2 - ASTRO BATT
3 - ASTRO INTU MASTIC
4 - METALLIC PIPE
5 - INSULATION MATERIAL
6 - RIGID WALL CONSTRUCTION

ASTROFLAME MANUFACTURERS OF PASSIVE FIRE STOP PRODUCTS	Astroflame (Fireseals) Ltd Intumescent House Unit 8 The IO Centre Stephenson Road Segensworth Fareham, PO15 5RU	FILE NAME: DET 26-0027 DATE: 20/05/14	ASTROFLAME has provided this specification on the basis of data, information & site conditions given to ASTROFLAME by the client, the respective ASTROFLAME product information & the existing level of technical knowledge. This specification relates to the expected performance of the proposed detail, were it to be subjected to the standardised test against which the judgement was made. The accuracy of this specification can only be guaranteed provided: 1. Only original ASTROFLAME products as defined within this specification are used 2. These specific products are used & installed only by a competant, experienced installer & by strictly obeying the conditions & calculations mentioned in this specification, as well as all relevent technical instructions, operating manuals, setting manuals, installation manuals & all other ASTROFLAME data sheets. 3. The proposed performance, listed prerequisities & criteria conform with actual existing site conditions & have been checked & agreed by the installer & client.

TECHNICAL DATA SHEET

ASTRO HPE SEALANT®

ETA 14-0096

CE-1121-CPR-JA5024

Unique identification code of product-type: AFHPE

DESIGN TO ETA14-0097 & CE 1121-CPR-JA5026 ASTRO HPE SEALANT IN A FIRE RESISTANT SEAL AROUND METALLIC PIPES IN ASTRO BATT SYSTEM WITHIN A RIGID WALL CONSTRUCTION

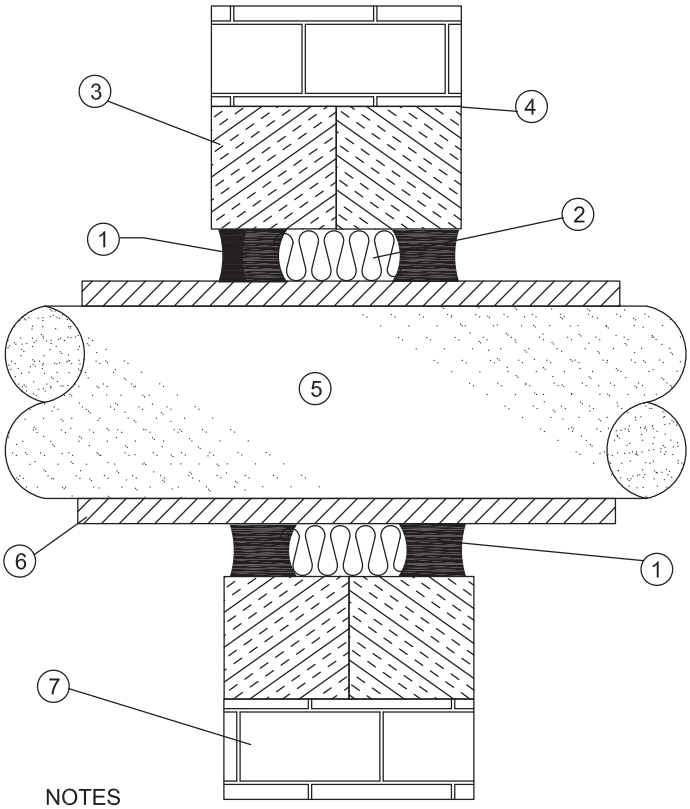

NOTES
1 - ASTRO HPE SEALANT TO A DEPTH OF 25mm
2 - PE BACKING ROD OR STONE WOOL 80kg DENSITY
3 - ASTRO BATT
4 - ASTRO INTU MASTIC
5 - METALLIC PIPE
6 - INSULATION MATERIAL
7 - RIGID WALL CONSTRUCTION

ASTROFLAME MANUFACTURERS OF PASSIVE FIRE STOP PRODUCTS	Astroflame (Fireseals) Ltd Intumescent House Unit 8 The IO Centre Stephenson Road Segensworth Fareham, PO15 5RU	FILE NAME: DET 26-0025 DATE: 20/05/14	ASTROFLAME has provided this specification on the basis of data, information & site conditions given to ASTROFLAME by the client, the respective ASTROFLAME product information & the existing level of technical knowledge. This specification relates to the expected performance of the proposed detail, were it to be subjected to the standardised test against which the judgement was made. The accuracy of this specification can only be guaranteed provided: 1. Only original ASTROFLAME products as defined within this specification are used 2. These specific products are used & installed only by a competant, experienced installer & by strictly obeying the conditions & calculations mentioned in this specification, as well as all relevent technical instructions, operating manuals, setting manuals, installation manuals & all other ASTROFLAME data sheets. 3. The proposed performance, listed prerequisities & criteria conform with actual existing site conditions & have been checked & agreed by the installer & client.

TECHNICAL DATA SHEET

ASTRO HPE SEALANT®

ETA 14-0096

CE-1121-CPR-JA5024

Unique identification code of product-type: AFHPE

DESIGN TO ETA 14-0099 & CE 1121-CPR-JA5026 ASTRO HPE SEALANT IN A FIRE RESISTANT SEAL AROUND INSULATED MULTI METALLIC PIPES IN A ASTRO BATT SYSTEM THROUGH A FLEXIBLE WALL CONSTRUCTION

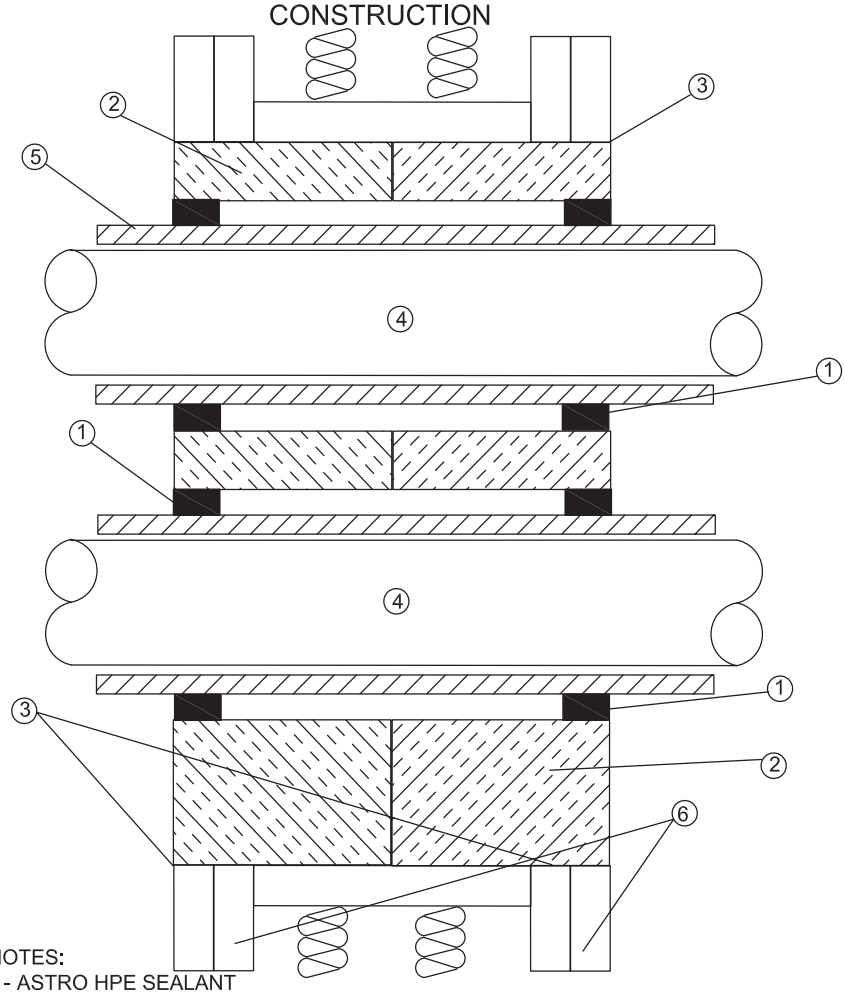

NOTES:
1 - ASTRO HPE SEALANT
2 - ASTRO BATT
3 - ASTRO INTU MASTIC
4 - MULTI METALLIC PIPES
5 - INSULATION MATERIAL
6 - FLEXIBLE WALL CONSTRUCTION

ASTROFLAME MANUFACTURERS OF PASSIVE FIRE STOP PRODUCTS	Astroflame (Fireseals) Ltd Intumescent House Unit 8 The IO Centre Stephenson Road Segensworth Fareham, PO15 5RU	FILE NAME: DET 26-0029 DATE: 20/05/14	ASTROFLAME has provided this specification on the basis of data, information & site conditions given to ASTROFLAME by the client, the respective ASTROFLAME product information & the existing level of technical knowledge. This specification relates to the expected performance of the proposed detail, were it to be subjected to the standardised test against which the judgement was made. The accuracy of this specification can only be guaranteed provided: 1. Only original ASTROFLAME products as defined within this specification are used 2. These specific products are used & installed only by a competant, experienced installer & by strictly obeying the conditions & calculations mentioned in this specification, as well as all relevent technical instructions, operating manuals, setting manuals, installation manuals & all other ASTROFLAME data sheets. 3. The proposed performance, listed prerequisities & criteria conform with actual existing site conditions & have been checked & agreed by the installer & client.

TECHNICAL DATA SHEET

ASTRO HPE SEALANT®

ETA 14-0096

CE-1121-CPR-JA5024

Unique identification code of product-type: AFHPE

DESIGN TO ETA 14-0099 & CE 1121-CPR-JA5026 ASTRO HPE SEALANT IN A FIRE RESISTANT SEAL AROUND INSULATED MULTI METALLIC PIPES IN ASTRO BATT SYSTEM THROUGH A RIGID WALL CONSTRUCTION

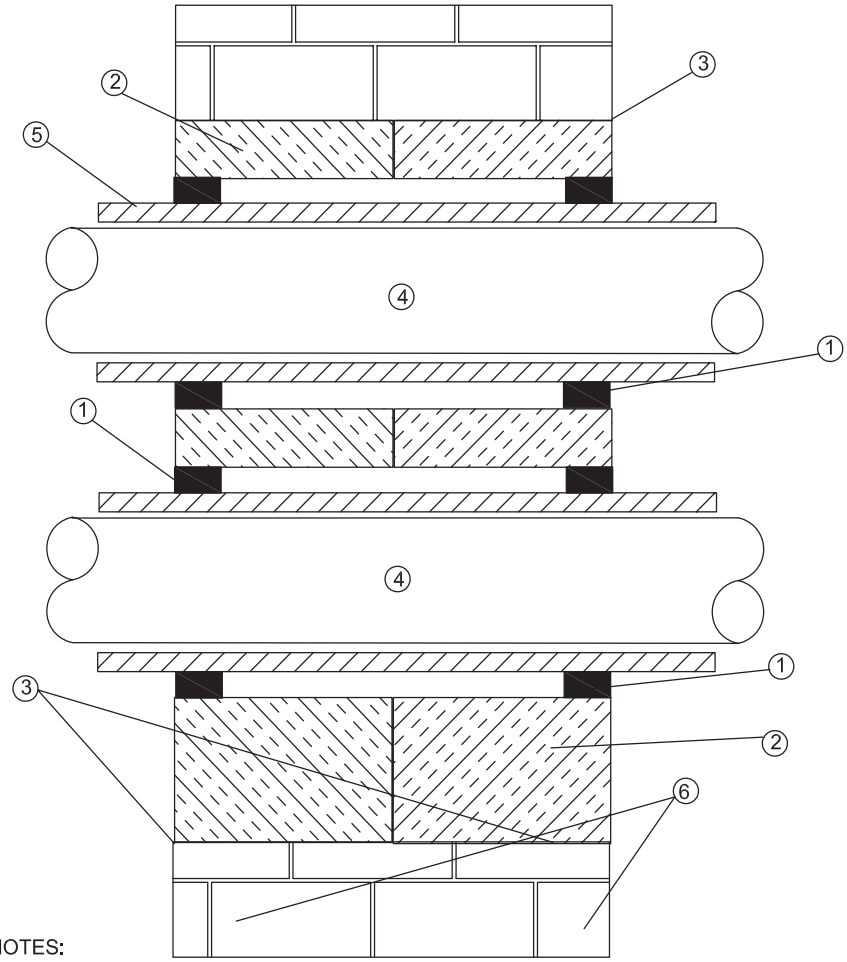

NOTES:
1 - ASTRO HPE SEALANT
2 - ASTRO BATT
3 - ASTRO INTU MASTIC
4 - MULTI METALLIC PIPES
5 - INSULATION MATERIAL
6 - RIGID WALL CONSTRUCTION

ASTROFLAME MANUFACTURERS OF PASSIVE FIRE STOP PRODUCTS	Astroflame (Fireseals) Ltd Intumescent House Unit 8 The IO Centre Stephenson Road Segensworth Fareham, PO15 5RU	FILE NAME: DET 26-0030 DATE: 20/05/14	ASTROFLAME has provided this specification on the basis of data, information & site conditions given to ASTROFLAME by the client, the respective ASTROFLAME product information & the existing level of technical knowledge. This specification relates to the expected performance of the proposed detail, were it to be subjected to the standardised test against which the judgement was made. The accuracy of this specification can only be guaranteed provided: 1. Only original ASTROFLAME products as defined within this specification are used 2. These specific products are used & installed only by a competant, experienced installer & by strictly obeying the conditions & calculations mentioned in this specification, as well as all relevent technical instructions, operating manuals, setting manuals, installation manuals & all other ASTROFLAME data sheets. 3. The proposed performance, listed prerequisities & criteria conform with actual existing site conditions & have been checked & agreed by the installer & client.

TECHNICAL DATA SHEET

ASTRO HPE SEALANT®

ETA 14-0096

CE-1121-CPR-JA5024

Unique identification code of product-type: AFHPE

Flexible and Rigid wall constructions according to 1.2.1 with wall thickness of minimum 100mm

Penetration seal with Astro PS Coating and Astro HPE Sealant installed centrally within the wall

Penetration Specification Mild Steel or Copper	Astro HPE (installed both faces)	Backing Material	Classification
40mm diameter and 1.5 - 14.2mm wall	20mm thick foil faced glass wool insulation (min 80kg/m^3)	15mm deep x 15mm wide annulus Astro HPE Sealant to both faces of the seal	EI60 U/C
40 - 159mm diameter and 2.3 - 14.2mm wall	30mm thick foil faced glass wool insulation (min 80kg/m^3)		E60 U/C EI45 U/C

Penetration Specification Mild Steel or Copper	Astro HPE (installed both faces)	Backing Material	Classification
40mm diameter and 1.7 - 14.2mm wall	20mm thick foil faced glass wool insulation (min 80kg/m^3)	15mm deep x 15mm wide annulus Astro HPE Sealant to both faces of the seal	EI60 U/C
40 - 150mm diameter and 2.3 - 14.2mm wall	30mm thick foil faced glass wool insulation (min 80kg/m^3)		

TECHNICAL DATA SHEET

ASTRO HPE SEALANT®

ETA 14-0096

CE-1121-CPR-JA5024

Unique identification code of product-type: AFHPE

DESIGN TO ETA 14-0097 & CE 1121-CPR-JA5025 ASTRO HPE SEALANT IN A FIRE RESISTANT SEAL AROUND AN INSULATED METALLIC PIPE IN ASTRO PS COATING SYSTEM SYSTEM THROUGH FLEXIBLE WALL CONSTRUCTION

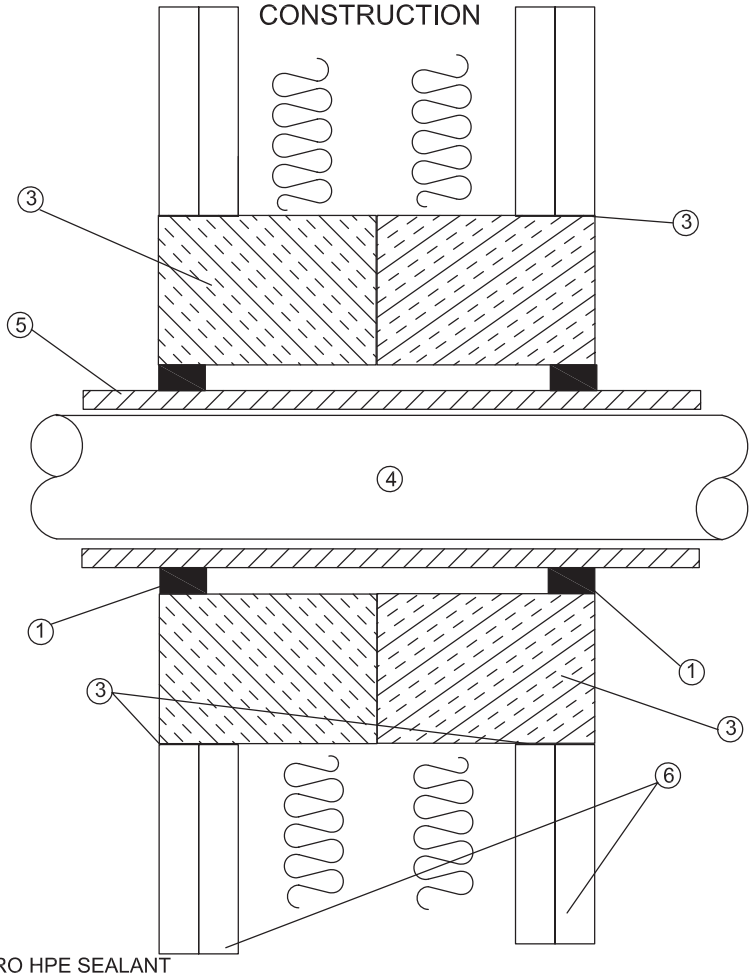

NOTES:
1 - ASTRO HPE SEALANT
2 - ASTRO PS COATING ON A 140kg STONE WOOL BACKER COATED EXTERNAL FACES
3 - ASTRO INTU MASTIC
4 - METALLIC PIPE
5 - INSULATION MATERIAL
6 - FLEXIBLE WALL CONSTRUCTION - NO FILLET REQUIRED

ASTROFLAME MANUFACTURERS OF PASSIVE FIRE STOP PRODUCTS	Astroflame (Fireseals) Ltd Intumescent House Unit 8 The IO Centre Stephenson Road Segensworth Fareham, PO15 5RU	FILE NAME: DET 26-0034 DATE: 20/05/14	ASTROFLAME has provided this specification on the basis of data, information & site conditions given to ASTROFLAME by the client, the respective ASTROFLAME product information & the existing level of technical knowledge. This specification relates to the expected performance of the proposed detail, were it to be subjected to the standardised test against which the judgement was made. The accuracy of this specification can only be guaranteed provided: 1. Only original ASTROFLAME products as defined within this specification are used 2. These specific products are used & installed only by a competant, experienced installer & by strictly obeying the conditions & calculations mentioned in this specification, as well as all relevent technical instructions, operating manuals, setting manuals, installation manuals & all other ASTROFLAME data sheets. 3. The proposed performance, listed prerequisities & criteria conform with actual existing site conditions & have been checked & agreed by the installer & client.

TECHNICAL DATA SHEET

ASTRO HPE SEALANT®

ETA 14-0096

CE-1121-CPR-JA5024

Unique identification code of product-type: AFHPE

DESIGN TO ETA 14-0004 & CE 1121-CPR-JA5022 HPE SEALANT IN A FIRE RESISTANT SEAL AROUND AN INSULATED METALLIC PIPE IN A PS COATING SYSTEM THROUGH FLEXIBLE WALL CONSTRUCTION

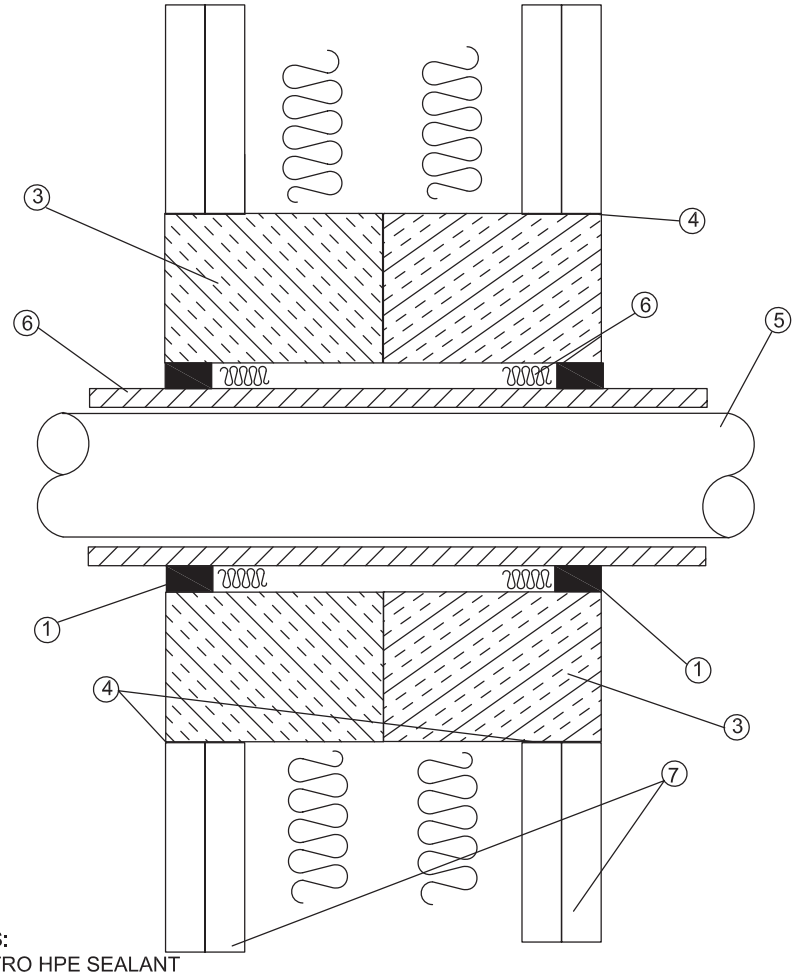

NOTES:
1 - ASTRO HPE SEALANT
2 - PE BACKING ROD OR STONE WOOL 80kg DENSITY
3 - ASTRO PS COATING ON A 140kg STONE WOOL BACKER COATED EXTERNAL FACES
4 - ASTRO INTU MASTIC
5 - METALLIC PIPE
6 - INSULATION MATERIAL
7 - FLEXIBLE WALL CONSTRUCTION - NO FILLET REQUIRED

ASTROFLAME MANUFACTURERS OF PASSIVE FIRE STOP PRODUCTS	Astroflame (Fireseals) Ltd Intumescent House Unit 8 The IO Centre Stephenson Road Segensworth Fareham, PO15 5RU	FILE NAME: DET 26-0032 DATE: 20/05/14	ASTROFLAME has provided this specification on the basis of data, information & site conditions given to ASTROFLAME by the client, the respective ASTROFLAME product information & the existing level of technical knowledge. This specification relates to the expected performance of the proposed detail, were it to be subjected to the standardised test against which the judgement was made. The accuracy of this specification can only be guaranteed provided: 1. Only original ASTROFLAME products as defined within this specification are used 2. These specific products are used & installed only by a competant, experienced installer & by strictly obeying the conditions & calculations mentioned in this specification, as well as all relevent technical instructions, operating manuals, setting manuals, installation manuals & all other ASTROFLAME data sheets. 3. The proposed performance, listed prerequisities & criteria conform with actual existing site conditions & have been checked & agreed by the installer & client.

TECHNICAL DATA SHEET

ASTRO HPE SEALANT®

ETA 14-0096

CE-1121-CPR-JA5024

Unique identification code of product-type: AFHPE

DESIGN TO ETA14-0097 & CE 1121-CPR-JA5025 ASTRO HPE SEALANT IN A FIRE RESISTANT SEAL AROUND METALLIC PIPES IN ASTRO PS COATING SYSTEM WITHIN A RIGID WALL CONSTRUCTION

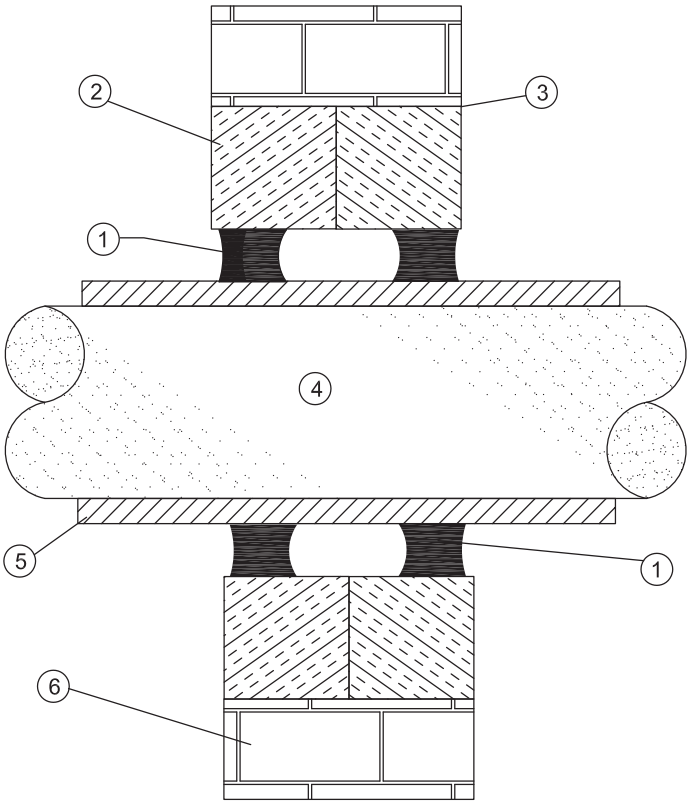

NOTES
1 - ASTRO HPE SEALANT TO A DEPTH OF 25mm
2 - ASTRO PS COATING ON A 140kg STONE WOOL BACKER COATED EXTERNAL FACES
3 - ASTRO INTU MASTIC
4 - METALLIC PIPE
5 - INSULATION MATERIAL
6 - RIGID WALL CONSTRUCTION

ASTROFLAME MANUFACTURERS OF PASSIVE FIRE STOP PRODUCTS	Astroflame (Fireseals) Ltd Intumescent House Unit 8 The IO Centre Stephenson Road Segensworth Fareham, PO15 5RU	FILE NAME: DET 26-0033 DATE: 20/05/14	ASTROFLAME has provided this specification on the basis of data, information & site conditions given to ASTROFLAME by the client, the respective ASTROFLAME product information & the existing level of technical knowledge. This specification relates to the expected performance of the proposed detail, were it to be subjected to the standardised test against which the judgement was made. The accuracy of this specification can only be guaranteed provided: 1. Only original ASTROFLAME products as defined within this specification are used 2. These specific products are used & installed only by a competant, experienced installer & by strictly obeying the conditions & calculations mentioned in this specification, as well as all relevent technical instructions, operating manuals, setting manuals, installation manuals & all other ASTROFLAME data sheets. 3. The proposed performance, listed prerequisities & criteria conform with actual existing site conditions & have been checked & agreed by the installer & client.

TECHNICAL DATA SHEET

ASTRO HPE SEALANT®

ETA 14-0096

CE-1121-CPR-JA5024

Unique identification code of product-type: AFHPE

DESIGN TO ETA14-0097 & CE 1121-CPR-JA5025 ASTRO HPE SEALANT IN A FIRE RESISTANT SEAL AROUND METALLIC PIPES IN ASTRO PS COATING SYSTEM WITHIN A RIGID WALL CONSTRUCTION

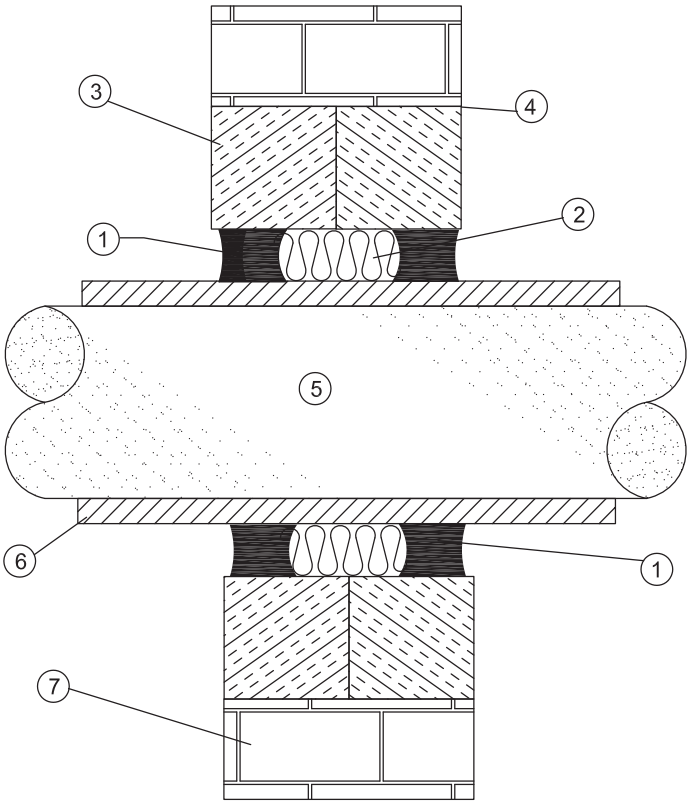

NOTES
1 - ASTRO HPE SEALANT TO A DEPTH OF 25mm
2 - PE BACKING ROD OR STONE WOOL 80kg DENSITY
3 - ASTRO PS COATING ON A 140kg STONE WOOL BACKER COATED EXTERNAL FACES
4 - ASTRO INTU MASTIC
5 - METALLIC PIPE
6 - INSULATION MATERIAL
7 - RIGID WALL CONSTRUCTION

ASTROFLAME MANUFACTURERS OF PASSIVE FIRE STOP PRODUCTS	Astroflame (Fireseals) Ltd Intumescent House Unit 8 The IO Centre Stephenson Road Segensworth Fareham, PO15 5RU	FILE NAME: DET 26-0031 DATE: 20/05/14	ASTROFLAME has provided this specification on the basis of data, information & site conditions given to ASTROFLAME by the client, the respective ASTROFLAME product information & the existing level of technical knowledge. This specification relates to the expected performance of the proposed detail, were it to be subjected to the standardised test against which the judgement was made. The accuracy of this specification can only be guaranteed provided: 1. Only original ASTROFLAME products as defined within this specification are used 2. These specific products are used & installed only by a competant, experienced installer & by strictly obeying the conditions & calculations mentioned in this specification, as well as all relevent technical instructions, operating manuals, setting manuals, installation manuals & all other ASTROFLAME data sheets. 3. The proposed performance, listed prerequisities & criteria conform with actual existing site conditions & have been checked & agreed by the installer & client.

TECHNICAL DATA SHEET

ASTRO HPE SEALANT®

ETA 14-0096

CE-1121-CPR-JA5024

Unique identification code of product-type: AFHPE

DESIGN TO ETA 14-0097 & CE 1121-CPR-JA5026 ASTRO HPE SEALANT IN A FIRE RESISTANT SEAL AROUND INSULATED MULTI METALLIC PIPES IN ASTRO PS COATING SYSTEM THROUGH A FLEXIBLE WALL CONSTRUCTION

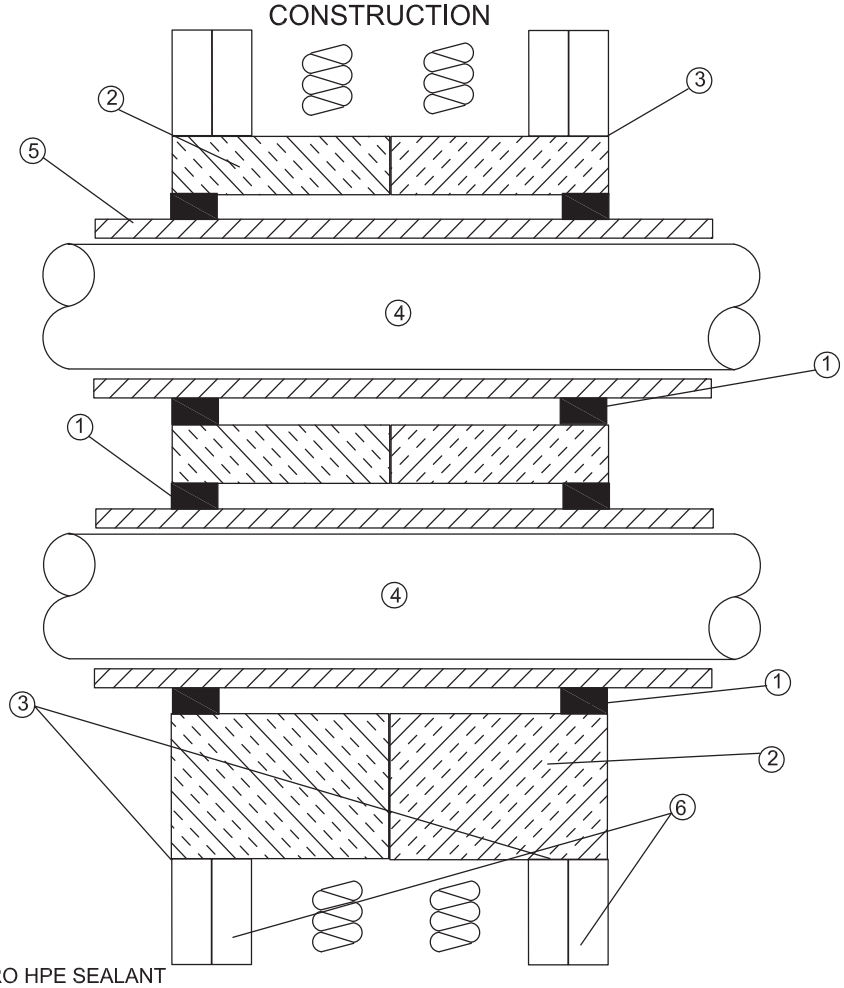

NOTES:
1 - ASTRO HPE SEALANT
2 - ASTRO PS COATING ON A 140kg STONE WOOL BACKER COATED EXTERNAL FACES
3 - ASTRO INTU MASTIC
4 - MULTI METALLIC PIPES
5 - INSULATION MATERIAL
6 - FLEXIBLE WALL CONSTRUCTION - NO FILLET REQUIRED

ASTROFLAME MANUFACTURERS OF PASSIVE FIRE STOP PRODUCTS	Astroflame (Fireseals) Ltd Intumescent House Unit 8 The IO Centre Stephenson Road Segensworth Fareham, PO15 5RU	FILE NAME: DET 26-0035 DATE: 20/05/14	ASTROFLAME has provided this specification on the basis of data, information & site conditions given to ASTROFLAME by the client, the respective ASTROFLAME product information & the existing level of technical knowledge. This specification relates to the expected performance of the proposed detail, were it to be subjected to the standardised test against which the judgement was made. The accuracy of this specification can only be guaranteed provided: 1. Only original ASTROFLAME products as defined within this specification are used 2. These specific products are used & installed only by a competant, experienced installer & by strictly obeying the conditions & calculations mentioned in this specification, as well as all relevent technical instructions, operating manuals, setting manuals, installation manuals & all other ASTROFLAME data sheets. 3. The proposed performance, listed prerequisities & criteria conform with actual existing site conditions & have been checked & agreed by the installer & client.

TECHNICAL DATA SHEET

ASTRO HPE SEALANT®

ETA 14-0096

CE-1121-CPR-JA5024

Unique identification code of product-type: AFHPE

DESIGN TO ETA 14-0097 & CE 1121-CPR-JA5025 ASTRO HPE SEALANT IN A FIRE RESISTANT SEAL AROUND INSULATED MULTI METALLIC PIPES IN ASTRO PS COATING SYSTEM THROUGH A RIGID WALL CONSTRUCTION

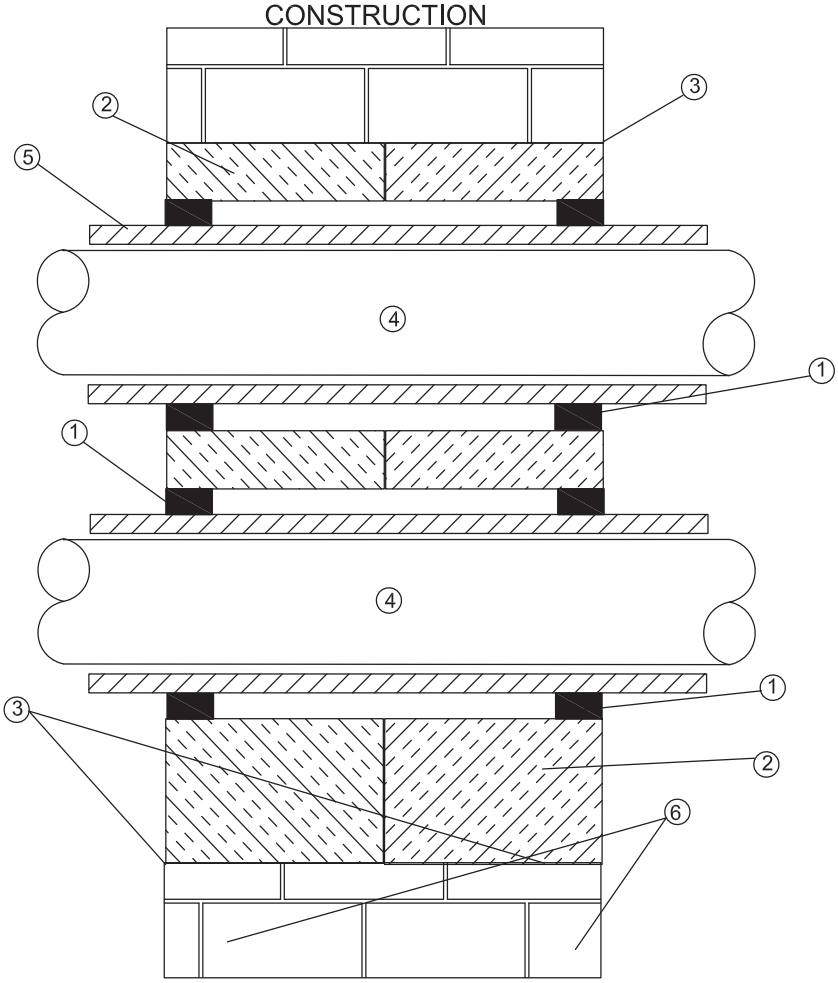

NOTES:
1 - ASTRO HPE SEALANT
2 - ASTRO PS COATING ON A 140kg STONE WOOL BACKER COATED EXTERNAL FACES
3 - ASTRO INTU MASTIC
4 - MULTI METALLIC PIPES
5 - INSULATION MATERIAL
6 - RIGID WALL CONSTRUCTION

FSi DEVELOP MANUFACTURE PROTECT	FSi Limited Westminster Industrial Estate Tamworth Road Measham DE12 7DS, UK. TEL: +44 (0)1530 515130 FAX: +44 (0)1530 273564 E-mail:technical@fsiltd.com www.fsiltd.com	REVISION: DATE: REVISION: DATE: PROJECT NAME:	FILE NAME: DET 26-0036 DATE: 03/04/14	FSi Ltd has provided this specification on the basis of data, information & site conditions given to FSi by the client, the respective FSi product information & the existing level of technical knowledge. This specification relates to the expected performance of the proposed detail, were it to be subjected to the standardised test against which the judgement was made. The accuracy of this specification can only be guaranteed provided: 1. Only original FSi products as defined within this specification are used 2. These specific products are used & installed only by a competent, experienced installer & by strictly obeying the conditions & calculations mentioned in this specification, as well as all relevant technical instructions, operating manuals, setting manuals, installation manuals & all other FSi data sheets. 3. The proposed performance, listed prerequisites & criteria conform with actual existing site conditions & have been checked & agreed by the installer & client. 4. FSi Product approvals refer to FSi products only.

TECHNICAL DATA SHEET

ASTRO HPE SEALANT®

ETA 14-0096

CE-1121-CPR-JA5024

Unique identification code of product-type: AFHPE

ASTRO HPE SEALANT INSTALLED IN A FLOOR SEAL AROUND A PLASTIC PIPE PP

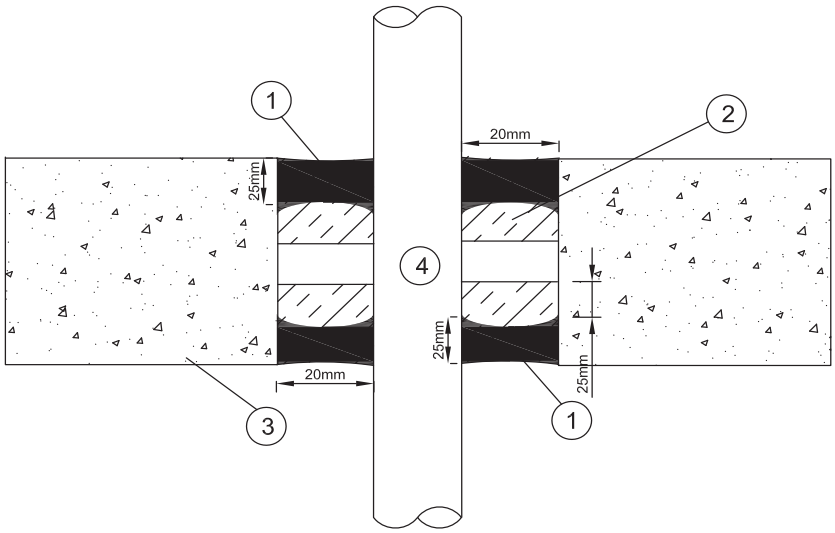

NOTES
1 - ASTRO HPE SEALANT 25mm DEPTH
2 - STONE WOOL BACKING
3 - MASONRY / CONCRETE FLOOR
4 - PLASTIC PIPE - PP

ASTROFLAME MANUFACTURERS OF PASSIVE FIRE STOP PRODUCTS	FILE NAME: DET 26-0016 DATE: 20/05/14	Astroflame (Fireseals) Limited Intumescent House Unit 8 The IO Centre Stephenson Road Segensworth Fareham, PO15 5RU	ASTROFLAME has provided this specification on the basis of data, information & site conditions given to ASTROFLAME by the client, the respective ASTROFLAME product information & the existing level of technical knowledge. This specification relates to the expected performance of the proposed detail, were it to be subjected to the standardised test against which the judgement was made. The accuracy of this specification can only be guaranteed provided: 1. Only original ASTROFLAME products as defined within this specification are used 2. These specific products are used & installed only by a competant, experienced installer & by strictly obeying the conditions & calculations mentioned in this specification, as well as all relevent technical instructions, operating manuals, setting manuals, installation manuals & all other ASTROFLAME data sheets. 3. The proposed performance, listed prerequisities & criteria conform with actual existing site conditions & have been checked & agreed by the installer & client.

TECHNICAL DATA SHEET

ASTRO HPE SEALANT®

ETA 14-0096

CE-1121-CPR-JA5024

Unique identification code of product-type: AFHPE

ASTRO HPE SEALANT INSTALLED IN A FLOOR SEAL AROUND A CABLES PENTRATION

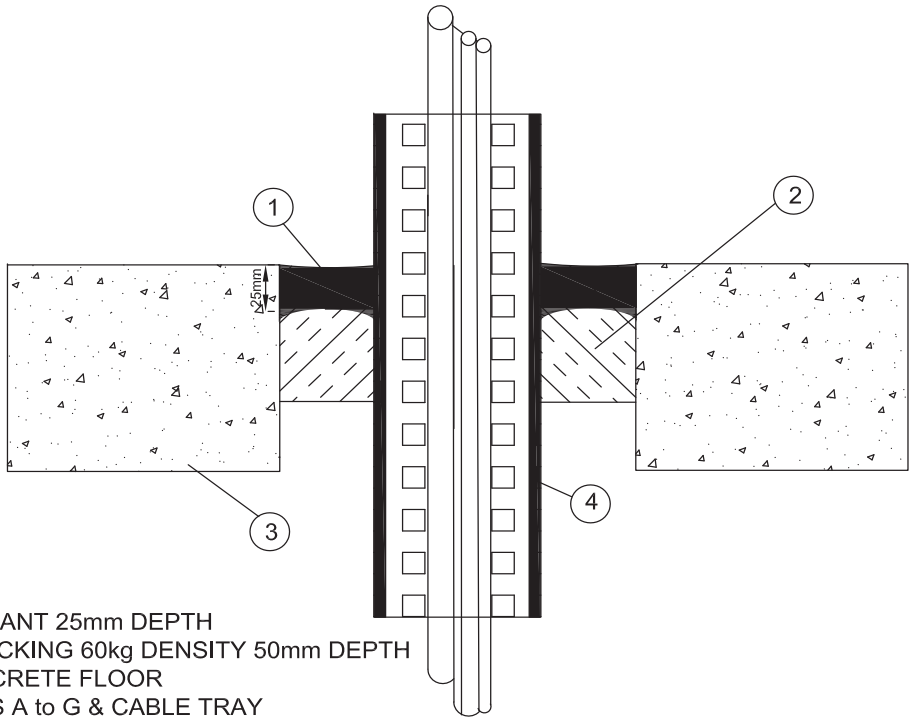

NOTES
1 - ASTRO HPE SEALANT 25mm DEPTH
2 - STONE WOOL BACKING 60kg DENSITY 50mm DEPTH
3 - MASONRY / CONCRETE FLOOR
4 - VARIOUS CABLES A to G & CABLE TRAY

ASTROFLAME MANUFACTURERS OF PASSIVE FIRE STOP PRODUCTS	FILE NAME: DET 26-0014 DATE: 20/05/14	Astroflame (Fireseals) Limited Intumescent House Unit 8 The IO Centre Stephenson Road Segensworth Fareham, PO15 5RU	ASTROFLAME has provided this specification on the basis of data, information & site conditions given to ASTROFLAME by the client, the respective ASTROFLAME product information & the existing level of technical knowledge. This specification relates to the expected performance of the proposed detail, were it to be subjected to the standardised test against which the judgement was made. The accuracy of this specification can only be guaranteed provided: 1. Only original ASTROFLAME products as defined within this specification are used 2. These specific products are used & installed only by a competant, experienced installer & by strictly obeying the conditions & calculations mentioned in this specification, as well as all relevent technical instructions, operating manuals, setting manuals, installation manuals & all other ASTROFLAME data sheets. 3. The proposed performance, listed prerequisities & criteria conform with actual existing site conditions & have been checked & agreed by the installer & client.

TECHNICAL DATA SHEET

ASTRO HPE SEALANT®

ETA 14-0096

CE-1121-CPR-JA5024

Unique identification code of product-type: AFHPE

ASTRO HPE SEALANT INSTALLED IN A FLOOR SEAL AROUND A CABLES PENTRATION

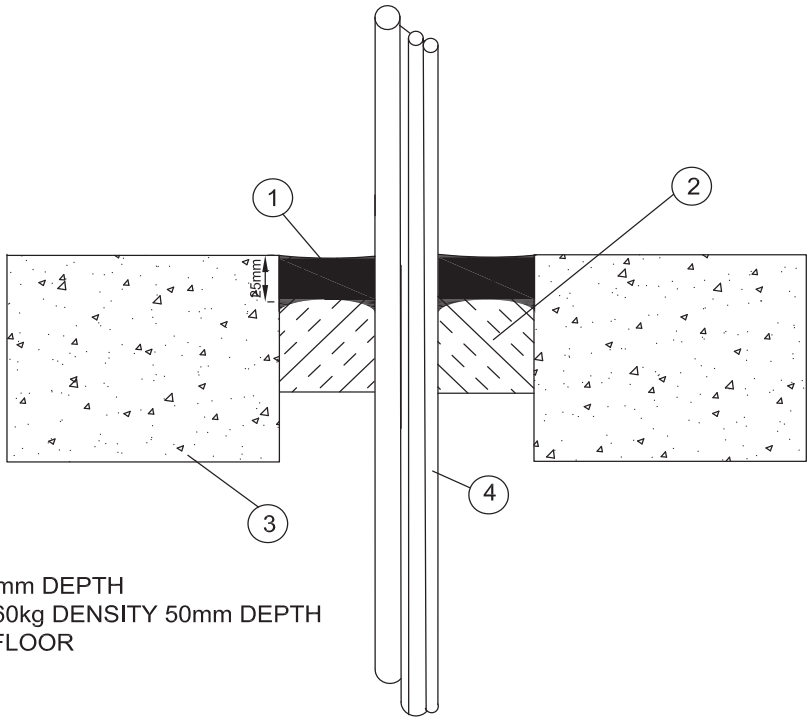

NOTES
1 - ASTRO HPE SEALANT 25mm DEPTH
2 - STONE WOOL BACKING 60kg DENSITY 50mm DEPTH
3 - MASONRY / CONCRETE FLOOR
4 - VARIOUS CABLES A to G

ASTROFLAME MANUFACTURERS OF PASSIVE FIRE STOP PRODUCTS	FILE NAME: DET 26-0015 DATE: 20/05/14	Astroflame (Fireseals) Limited Intumescent House Unit 8 The IO Centre Stephenson Road Segensworth Fareham, PO15 5RU	ASTROFLAME has provided this specification on the basis of data, information & site conditions given to ASTROFLAME by the client, the respective ASTROFLAME product information & the existing level of technical knowledge. This specification relates to the expected performance of the proposed detail, were it to be subjected to the standardised test against which the judgement was made. The accuracy of this specification can only be guaranteed provided: 1. Only original ASTROFLAME products as defined within this specification are used 2. These specific products are used & installed only by a competant, experienced installer & by strictly obeying the conditions & calculations mentioned in this specification, as well as all relevent technical instructions, operating manuals, setting manuals, installation manuals & all other ASTROFLAME data sheets. 3. The proposed performance, listed prerequisities & criteria conform with actual existing site conditions & have been checked & agreed by the installer & client.

TECHNICAL DATA SHEET

ASTRO HPE SEALANT®

ETA 14-0096

CE-1121-CPR-JA5024

Unique identification code of product-type: AFHPE

ASTRO HPE SEALANT INSTALLED IN A FLOOR SEAL AROUND A METALLIC PIPE COPPER OR STEEL

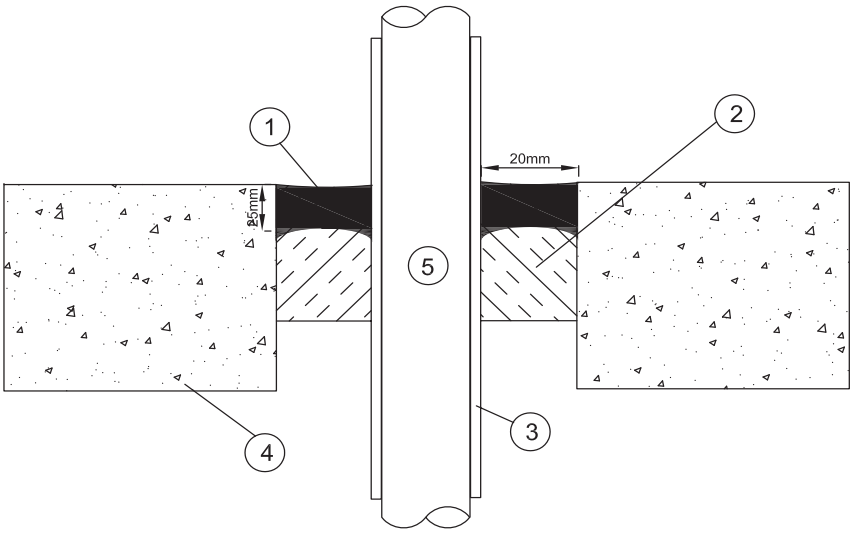

NOTES
1 - ASTRO HPE SEALANT 25mm DEPTH
2 - STONE WOOL BACKING 60kg DENSITY 50mm DEPTH
3 - ARMAFLEX INSULATION 13 - 32mm
4 - MASONRY / CONCRETE FLOOR
5 - METALLIC PIPE - COPPER / STEEL

ASTROFLAME MANUFACTURERS OF PASSIVE FIRE STOP PRODUCTS	FILE NAME: DET 26-0013 DATE: 20/05/14	Astroflame (FIreseals) LImIted Intumescent House UnIt 8 The IO Centre Stephenson Road Segensworth Fareham, PO15 5RU	ASTROFLAME has provided this specification on the basis of data, information & site conditions given to ASTROFLAME by the client, the respective ASTROFLAME product information & the existing level of technical knowledge. This specification relates to the expected performance of the proposed detail, were it to be subjected to the standardised test against which the judgement was made. The accuracy of this specification can only be guaranteed provided: 1. Only original ASTROFLAME products as defined within this specification are used 2. These specific products are used & installed only by a competant, experienced installer & by strictly obeying the conditions & calculations mentioned in this specification, as well as all relevent technical instructions, operating manuals, setting manuals, installation manuals & all other ASTROFLAME data sheets. 3. The proposed performance, listed prerequisities & criteria conform with actual existing site conditions & have been checked & agreed by the installer & client.

TECHNICAL DATA SHEET

ASTRO HPE SEALANT®

ETA 14-0096

CE-1121-CPR-JA5024

Unique identification code of product-type: AFHPE

ASTRO HPE SEALANT INSTALLED IN A FLOOR SEAL AROUND A PLASTIC PIPE PVC OR PE

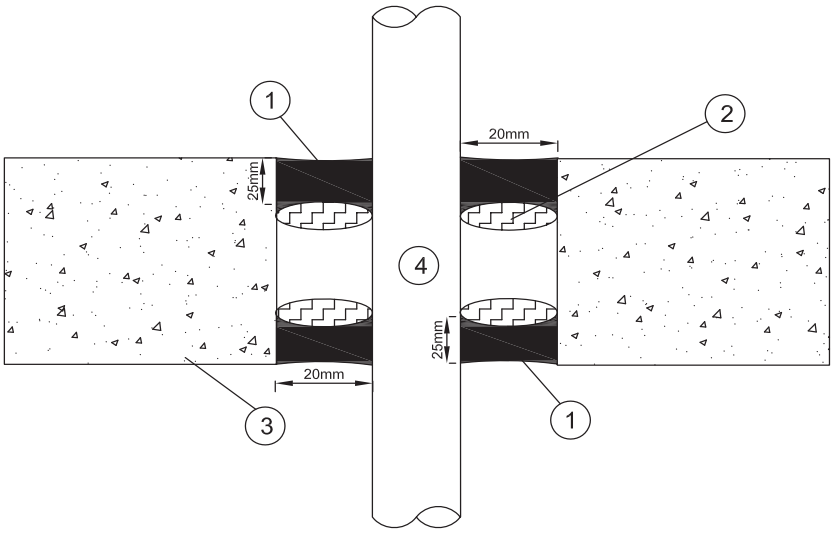

NOTES
1 - ASTRO HPE SEALANT 25mm DEPTH
2 - PE BACKING ROD
3 - MASONRY / CONCRETE FLOOR
4 - PLASTIC PIPE - PVC / PE

ASTROFLAME MANUFACTURERS OF PASSIVE FIRE STOP PRODUCTS	FILE NAME: DET 26-0012 DATE: 20/05/14	Astroflame (FIreseals) LImIted Intumescent House UnIt 8 The IO Centre Stephenson Road Segensworth Fareham, PO15 5RU	ASTROFLAME has provided this specification on the basis of data, information & site conditions given to ASTROFLAME by the client, the respective ASTROFLAME product information & the existing level of technical knowledge. This specification relates to the expected performance of the proposed detail, were it to be subjected to the standardised test against which the judgement was made. The accuracy of this specification can only be guaranteed provided: 1. Only original ASTROFLAME products as defined within this specification are used 2. These specific products are used & installed only by a competant, experienced installer & by strictly obeying the conditions & calculations mentioned in this specification, as well as all relevent technical instructions, operating manuals, setting manuals, installation manuals & all other ASTROFLAME data sheets. 3. The proposed performance, listed prerequisities & criteria conform with actual existing site conditions & have been checked & agreed by the installer & client.

TECHNICAL DATA SHEET

ASTRO HPE SEALANT®

ETA 14-0096
CE-1121-CPR-JA5024

Unique identification code of product-type: AFHPE

Durability and Serviceability

Requirement - ETAG No 026: Part 2: Clause 2.4.12

The principle of the durability test is to select suitable physico-chemical or technological properties of the product and to check whether these properties have changed during exposure of the product to defined exposure conditions. The product shall be tested according to the following procedures:

Property	Test method
Appearance	EOTA ETAG No 026: Part 2: Clause B.12
Hardness After Curing	EOTA ETAG No 026: Part 2: Clause B.5.3
Expansion Pressure	EOTA TR 024: 2009, clause 3.1.12
Expansion Ratio	EOTA TR 024: 2009, clause 3.1.11

Expansion Ratio

Exposure	Individual values	Mean
Blank Samples	**24.52, 26.23, 25.58**	**A = 25.44**
Type Z_1	23.86, 26.77, 22.44	A = 24.36

Expansion Pressure

Exposure	Individual values (N/mm^2)	Mean
Blank Samples	0.624, 0.610, 0.618	A = 0.618
Type Z_1	0.640, 0.590, 0.590	A = 0.606

Conclusions

The data discussed above satisfies the general aspects relating to fitness for use: Durability and serviceability: 12 of EOTA ETAG No 026: Part 2, for Type Z_1 environmental conditions: Products for penetration seals intended for uses at internal conditions with high humidity, excluding temperatures below 0°C

Identification of the product

Requirement - ETAG No 026: Part 2: Clause 2.4.12

The Intertek MSG report No. MECH/W002016RL001 details the following tests, as detailed in ETAG No 026: Part 2, utilised to identify Astroflame Astro HPE:

Product characteristic	Verification Method
TGA	EOTA ETAG No 026: Part 3: Clause B.2
Viscosity of Liquid Materials	EOTA ETAG No 026: Part 3: Clause B.7
Density of Liquid Materials	EOTA ETAG No 026: Part 3: Clause B.6.1
Hardness After Curing	EOTA ETAG No 026: Part 2: Clause B.5.3

TECHNICAL DATA SHEET

ASTRO HPE SEALANT®

ETA 14-0096

CE-1121-CPR-JA5024

Unique identification code of product-type: AFHPE

The drywall construction was of overall dimensions 3000mm wide by 3000mm high by 100mm thick. The framing comprised 50mm wide galvanised mild steel studs, at maximum 600mm centres, friction fitted into galvanised steel head and base channels. Each side of the stud frame was faced with two layers of 12.5mm thick 'Gypsum' Type F plasterboard. The framework was infilled with 50mm thick mineral wool insulation having a nominal density of 100kg/m3. The wall was provided with eight circular apertures, which was penetrated by a range of shower units.

Specimen	Aperture	Seal type	Service
13	2no. 75mm diameter apertures	The aperture was sealed with a nominally 10mm wide by 25mm depth of Astroflame Fireseals Limited "Astro HPE Sealant (high pressure exerting)" Sealant, applied flush with the unexposed face of the wall	Uponor water valve with tap unit fitted to project from the unexposed face of the partition
14	2no. 75mm diameter apertures	The aperture was sealed with a nominally 10mm wide by 25mm depth of Astroflame Fireseals Limited "Astro HPE Sealant (high pressure exerting)" Sealant, applied flush with the exposed face of the wall	Uponor water valve with tap unit fitted to project from the unexposed face of the partition
15	2no. 75mm diameter apertures	The aperture was sealed with a nominally 10mm wide by 25mm depth of Astroflame Fireseals Limited "Astro HPE Sealant (high pressure exerting)" Sealant, applied flush with the unexposed face of the wall	Uponor water valve with tap unit fitted to project from the unexposed face of the partition
16	2no. 75mm diameter apertures	The aperture was sealed with a nominally 10mm wide by 25mm depth of Astroflame Fireseals Limited "Astro HPE Sealant (high pressure exerting)" Sealant, applied flush with the exposed face of the wall	Uponor water valve with tap unit fitted to project from the unexposed face of the partition

Specimen	Integrity (minutes)			insulation (minutes)
	Cotton pad	Sustained flames	Gap gauge	
13	132*	132*	132*	132*
14	132*	132*	132*	132*
15	132*	132*	132*	132*
16	132*	132*	132*	132*

* The test duration. The test was discontinued after a period of 132 minutes.

TECHNICAL DATA SHEET

ASTRO HPE SEALANT®

TECHNICAL SCHEDULE
No. CF 5127

Unique identification code of product-type: AFHPE

Astro HPE Sealant

This approval relates to the use of Astro HPE intumescent sealant pipe closure system for fire protection where there are services penetrating walls. The detailed scope is given in the Approval Matrix included in this Certificate. This shows the acceptable configurations to provide fire resistance periods in accordance with BS EN 1366-3: 2009 of up to 120 minutes for differing services and elements of construction

This certification is designed to demonstrate compliance of the product or system specifically with Approved Document B (England and Wales), Section 2 of the Technical Standards (Scotland), Technical Booklet E (N. Ireland). If compliance is required to other regulatory or guidance document there may be additional considerations or conflict to be taken into account.'

The product is approved on the basis of:

I. Initial type testing
II. Audit testing at the frequency specified TS03
III. A design appraisal against TS03
IV. Inspection and surveillance of factory production control
V. Production surveillance under ISO 9001: 2008

The masonry or concrete walls may be and drywalls shall be at least 100mm thick and have at least the same fire rating as that required for the penetration seal

The services which may be fitted through the seals are PVC, HDPE, ABS, insulated copper pipes and cables as detailed within the Approval Matrix included in this Certificate

The approval relates to on-going production. Product and/or its immediate packaging is identified with the manufacturer's name, the product name or number, the CERTIFIRE name or name and mark, together with the CERTIFIRE certifire number and application where appropriate

TECHNICAL DATA SHEET

ASTRO HPE SEALANT®

TECHNICAL SCHEDULE
No. CF 5127

ASTROFLAME
MANUFACTURERS OF PASSIVE FIRE STOP PRODUCTS

Unique identification code of product-type: AFHPE

Pipe Size and Type	Astro HPE Dimensions	Backing Material	Minimum Wall Thickness	Integrity	Insulation
PVC - 125mm ø by 4.8 - 7.2mm wall thickness	16mm annulus x 25mm deep	Stone wool 30mm deep nominal 80kg/m³	100mm	**120 minutes**	**120 minutes**
PVC - 40mm ø by 1.9 - 3mm wall thickness	10mm annulus x 25mm deep	N/A			
HDPE - 90mm ø by 9.2mm wall thickness	12.5mm annulus x 25mm deep				
ABS - 90mm ø by 6mm wall thickness	12.5mm annulus x 25mm deep				
Copper - 60 ø by 0.8 - 14.2mm wall thickness, with 32mm Armaflex insulation	20mm annulus x 25mm deep			120 minutes	90 minutes
Copper - 13 ø 0.8 - 7mm wall thickness, with 13mm Armaflex insulation	12mm annulus x 25mm deep			120 minutes	120 minutes

Walls		The walls shall be a minimum of 100mm thick. Drywalls shall comprise a minimum of 2 layers of 'Type F' Gypsum board on both faces, with minimum 50mm studs. Masonry / Concrete walls shall have a minimum density for concrete or brick of 780kg/m³ and for aerated concrete blocks of 600kg/m³. All walls shall have at least the same fire rating as that required for the pipe closure system.		
Application Technique		The hole for the pipe shall be drilled to suit the required annular space. The pipe shall then be positioned centrally within the hole and then the remaining annular space shall be in-filled to full depth (of the drywall skin) min 25mm, with the Astro HPE intumescent sealant material		
Service Coat-Back		Not required	**U Value**	Not known
Service support Requirements		Services should be rigidly supported via steel angles, hangars or channels, not further than 150mm and 450mm from the surface of the sealing system on both faces		
Resistance to Smoke		Not evaluated by this approval	**Weather Capability**	Not evaluated by this approval
Acoustic Rating		Not evaluated by this approval	**Movement Capability**	Not evaluated by this approval

TECHNICAL DATA SHEET

ASTRO HPE SEALANT®

TECHNICAL SCHEDULE
No. CF 5127

Unique identification code of product-type: AFHPE

Pipe Size and Type	Astro HPE Dimensions	Backing Material	Minimum Wall Thickness	Integrity	Insulation
HDPE - 63mm ø by 7.2mm wall thickness with Cables up to ø 21mm	300mm wide x 100mm high x 25mm deep	N/A	100mm	120 minutes	120 minutes
Cables up to ø 21mm	300 wide x 100mm high x 25mm deep				
Walls	The walls shall be a minimum of 100mm thick. Drywalls shall comprise a minimum of 2 layers of 'Type F' Gypsum board on both faces, with minimum 50mm studs. Masonry / Concrete walls shall have a minimum density for concrete or brick of 780kg/m^3 and for aerated concrete blocks of 600kg/m^3. All walls shall have at least the same fire rating as that required for the pipe closure system.				
Application Technique	The hole for the pipe shall be drilled to suit the required annular space. The pipe shall then be positioned centrally within the hole and then the remaining annular space shall be in-filled to full depth (of the drywall skin) min 25mm, with the Astro HPE intumescent sealant material				
Service Coat-Back	Not required			**U Value**	Not known
Service support Requirements	Services should be rigidly supported via steel angles, hangars or channels, not further than 150mm and 450mm from the surface of the sealing system on both faces				
Resistance to Smoke	Not evaluated by this approval		**Weather Capability**		Not evaluated by this approval
Acoustic Rating	Not evaluated by this approval		**Movement Capability**		Not evaluated by this approval

TECHNICAL DATA SHEET

ASTRO HPE SEALANT®

TECHNICAL SCHEDULE
No. CF 5127

Unique identification code of product-type: AFHPE

Wall Installations					
Product Name					
Joint Width mm	**Depth mm**	Backing Material	Gap Face Material	Integrity (mins)	Insulation (mins)
20	**25**	PE Backing	AAC/DW	120	120
Application Technique	Compress backing material into gap / joint to form a pocket of the correct depth for the sealant to finish flush with the surface of the wall, then infill with Astro HPE to a depth off 25mm. The seal is required to be formed on **both** faces / sides of the wall				
Walls	The walls shall be a minimum of 100mm thick. Drywalls shall comprise a minimum of 2 layers of 'Type F' Gypsum board on both faces, with minimum 50mm studs. Masonry / Concrete walls shall have a minimum density for concrete or brick of 780kg/m^3 and for aerated concrete blocks of 600kg/m^3. All walls shall have at least the same fire rating as that required for the pipe closure system.				
Service Coat-Back	Not required			**U Value**	Not known
Service support Requirements	Services should be rigidly supported via steel angles, hangars or channels, not further than 150mm and 450mm from the surface of the sealing system on both faces				
Resistance to Smoke	Not evaluated by this approval		**Weather Capability**		Not evaluated by this approval
Acoustic Rating	Not evaluated by this approval		**Movement Capability**		Not evaluated by this approval

AAC - Autoclaved aerated cocnrete
PE - Polyethylene
DW - Drywall

TECHNICAL DATA SHEET

ASTRO HPE SEALANT®

TECHNICAL SCHEDULE
No. CF5127

Unique identification code of product-type: AFHPE

TYPICAL DETAIL OF ASTRO HPE SEALANT

Fire Resistance 120EI
Acoustics N/A
Air Permeability tested pressure 600Pa

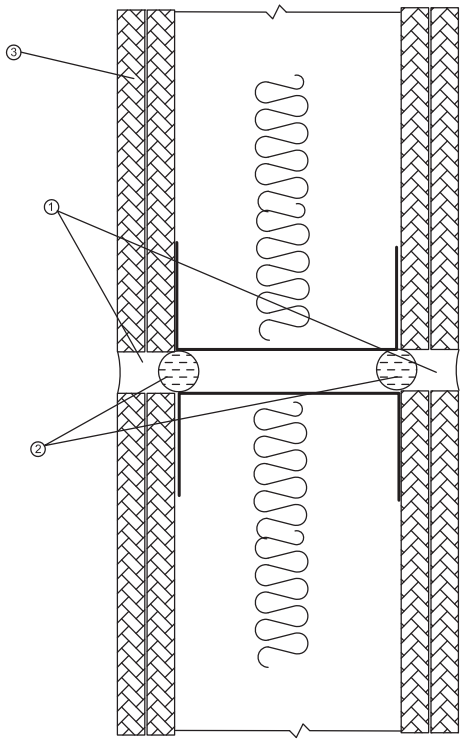

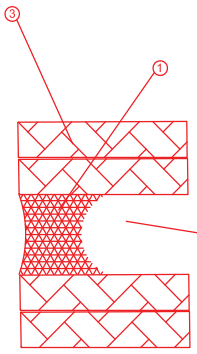

1 - ASTRO HPE SEALANT
2 - PE BACKING ROD or STONE WOOL BACKING
3 - FLEXIBLE WALL CONSTRUCTION

NOTE:
AIR PERMEABILITY TEST WAS CONDUCTED ON A SINGLE SEAL INSTALLATION AND BACKING ROD WAS REMOVED AS PER CUT AWAY SECTION

ASTROFLAME MANUFACTURERS OF PASSIVE FIRE STOP PRODUCTS	Astroflame (Fireseals) Ltd Intumescent House Unit 8 The IO Centre Stephenson Road Segensworth Fareham, PO15 5RU	FILE NAME: DET 26-0003 DATE: 20/05/14	ASTROFLAME has provided this specification on the basis of data, information & site conditions given to ASTROFLAME by the client, the respective ASTROFLAME product information & the existing level of technical knowledge. This specification relates to the expected performance of the proposed detail, were it to be subjected to the standardised test against which the judgement was made. The accuracy of this specification can only be guaranteed provided: 1. Only original ASTROFLAME products as defined within this specification are used 2. These specific products are used & installed only by a competant, experienced installer & by strictly obeying the conditions & calculations mentioned in this specification, as well as all relevent technical instructions, operating manuals, setting manuals, installation manuals & all other ASTROFLAME data sheets. 3. The proposed performance, listed prerequisities & criteria conform with actual existing site conditions & have been checked & agreed by the installer & client.

TECHNICAL DATA SHEET

ASTRO HPE SEALANT®

TECHNICAL SCHEDULE
No. CF5127

Unique identification code of product-type: AFHPE

ASTRO HPE SEALANT TO CABLE TRAY IN A FLEXIBLE WALL

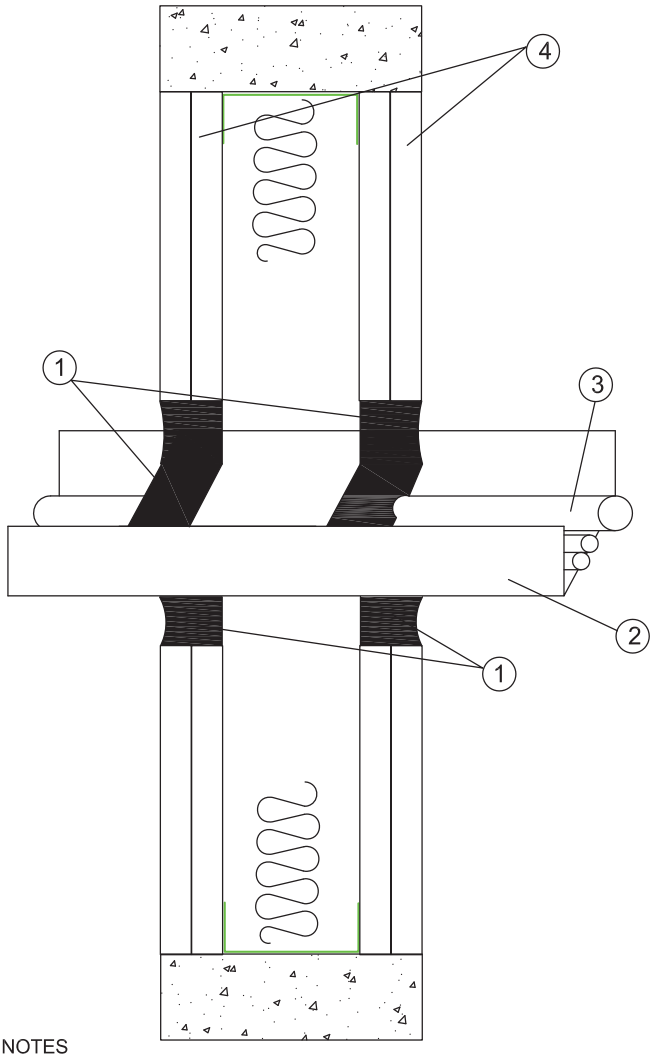

NOTES
1 - ASTRO HPE SEALANT
2 - CABLE TRAY
3 - VARIOUS CABLES
4 - 2 LAYERS OF 12.5MM FLEXIBLE WALL ON 'U' CHANNEL

ASTROFLAME MANUFACTURERS OF PASSIVE FIRE STOP PRODUCTS	Astroflame (Fireseals) Ltd Intumescent House Unit 8 The IO Centre Stephenson Road Segensworth Fareham, PO15 5RU	FILE NAME: DET 26-0009 DATE: 20/05/14	ASTROFLAME has provided this specification on the basis of data, information & site conditions given to ASTROFLAME by the client, the respective ASTROFLAME product information & the existing level of technical knowledge. This specification relates to the expected performance of the proposed detail, were it to be subjected to the standardised test against which the judgement was made. The accuracy of this specification can only be guaranteed provided: 1. Only original ASTROFLAME products as defined within this specification are used 2. These specific products are used & installed only by a competant, experienced installer & by strictly obeying the conditions & calculations mentioned in this specification, as well as all relevent technical instructions, operating manuals, setting manuals, installation manuals & all other ASTROFLAME data sheets. 3. The proposed performance, listed prerequisities & criteria conform with actual existing site conditions & have been checked & agreed by the installer & client.

TECHNICAL DATA SHEET

ASTRO HPE SEALANT®

TECHNICAL SCHEDULE
No. CF 5127

Unique identification code of product-type: AFHPE

ASTRO HPE SEALANT TO LOOSE CABLES IN A FLEXIBLE WALL

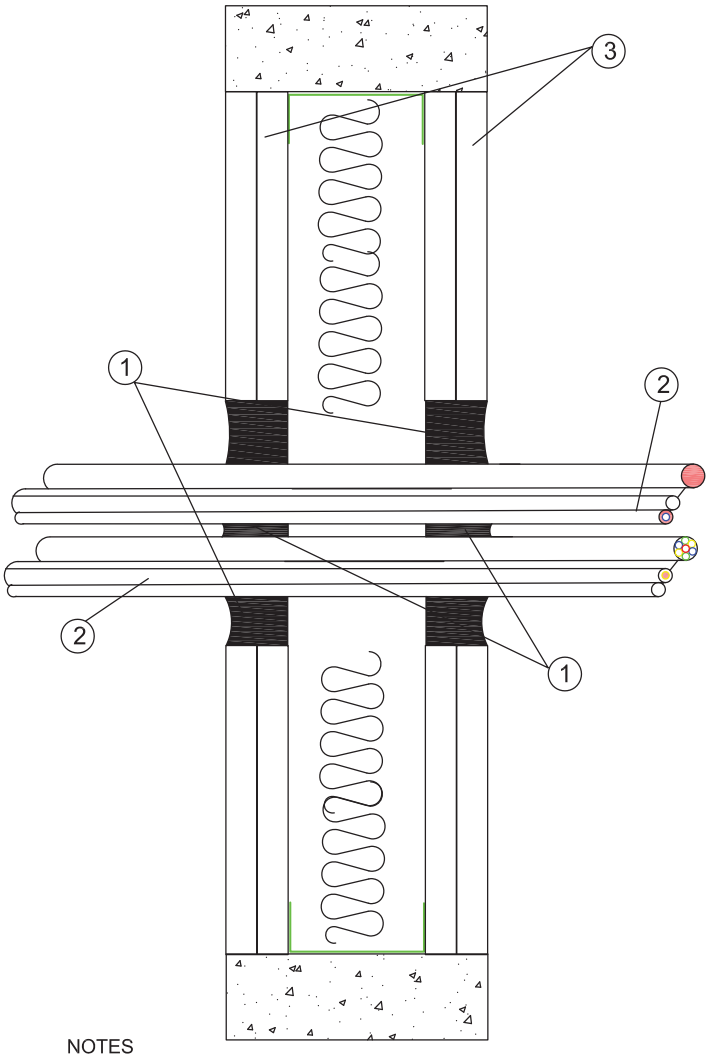

NOTES
1 -ASTRO HPE SEALANT
3 - VARIOUS CABLES
3 - 2 LAYERS OF 12.5MM FLEXIBLE WALL ON 'U' CHANNEL

ASTROFLAME MANUFACTURERS OF PASSIVE FIRE STOP PRODUCTS	Astroflame (Fireseals) Ltd Intumescent House Unit 8 The IO Centre Stephenson Road Segensworth Fareham, PO15 5RU	FILE NAME: DET 26-0008 DATE: 20/05/14	ASTROFLAME has provided this specification on the basis of data, information & site conditions given to ASTROFLAME by the client, the respective ASTROFLAME product information & the existing level of technical knowledge. This specification relates to the expected performance of the proposed detail, were it to be subjected to the standardised test against which the judgement was made. The accuracy of this specification can only be guaranteed provided: 1. Only original ASTROFLAME products as defined within this specification are used 2. These specific products are used & installed only by a competant, experienced installer & by strictly obeying the conditions & calculations mentioned in this specification, as well as all relevent technical instructions, operating manuals, setting manuals, installation manuals & all other ASTROFLAME data sheets. 3. The proposed performance, listed prerequisities & criteria conform with actual existing site conditions & have been checked & agreed by the installer & client.

TECHNICAL DATA SHEET

ASTRO HPE SEALANT®

TECHNICAL SCHEDULE
No. CF 5127

Unique identification code of product-type: AFHPE

ASTRO HPE SEALANT TO CABLE TRUNKING IN A FLEXIBLE WALL

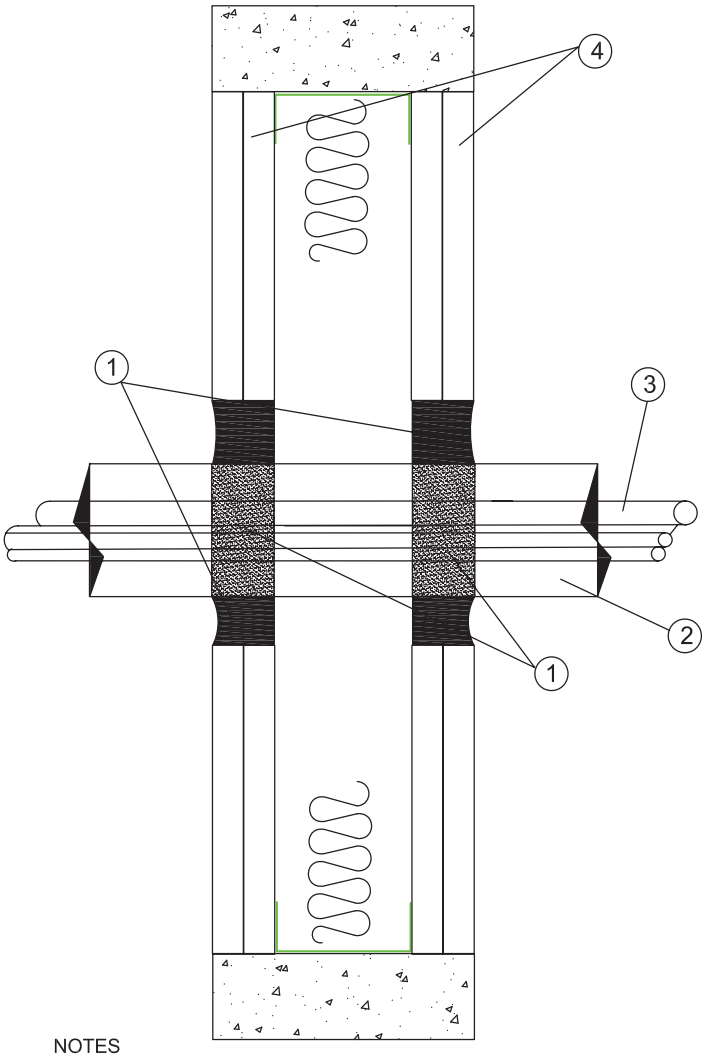

NOTES
1 - ASTRO HPE SEALANT
2 - CABLE TRUNKING
3 - VARIOUS CABLES
4 - 2 LAYERS OF 12.5MM FLEXIBLE WALL ON 'U' CHANNEL

ASTROFLAME MANUFACTURERS OF PASSIVE FIRE STOP PRODUCTS	Astroflame (Fireseals) Ltd Intumescent House Unit 8 The IO Centre Stephenson Road Segensworth Fareham, PO15 5RU	FILE NAME: DET 26-0007 DATE: 20/05/14	ASTROFLAME has provided this specification on the basis of data, information & site conditions given to ASTROFLAME by the client, the respective ASTROFLAME product information & the existing level of technical knowledge. This specification relates to the expected performance of the proposed detail, were it to be subjected to the standardised test against which the judgement was made. The accuracy of this specification can only be guaranteed provided: 1. Only original ASTROFLAME products as defined within this specification are used 2. These specific products are used & installed only by a competant, experienced installer & by strictly obeying the conditions & calculations mentioned in this specification, as well as all relevent technical instructions, operating manuals, setting manuals, installation manuals & all other ASTROFLAME data sheets. 3. The proposed performance, listed prerequisities & criteria conform with actual existing site conditions & have been checked & agreed by the installer & client.

TECHNICAL DATA SHEET

ASTRO HPE SEALANT®

TECHNICAL SCHEDULE
No. CF 5127

Unique identification code of product-type: AFHPE

TYPICAL VERTICAL SECTION SHOWING USE OF THE ASTRO HPE SEALANT IN A FLEXIBLE WALL WITH A PLASTIC PIPE

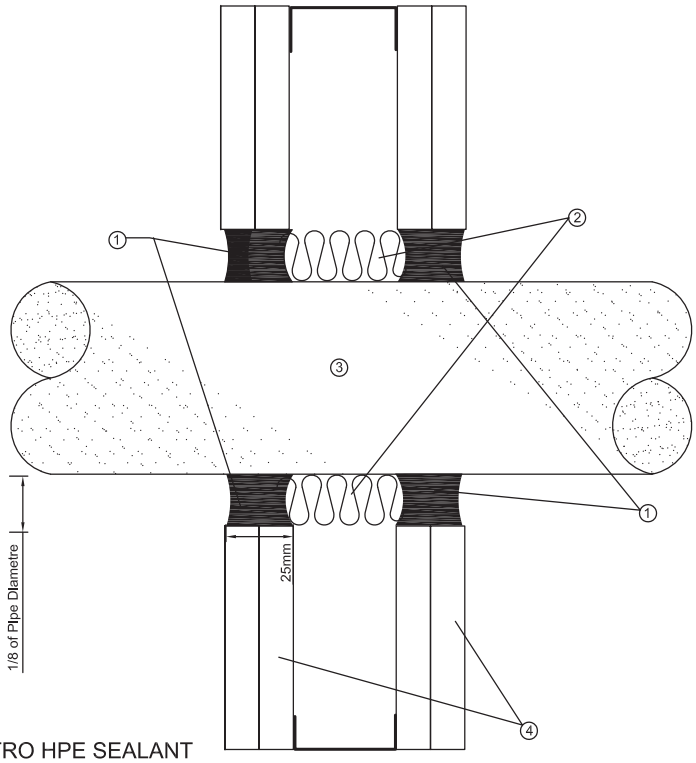

1 - ASTRO HPE SEALANT
2 - PE BACKING ROD or STONE WOOL BACKING
3 - COMBUSTIBLE PIPE
4 - FLEXIBLE WALL CONSTRUCTION

ANULAR GAP AROUND PIPE SHOULD BE 1/8th of the PIPE DIAMETRE & THEN 25mm DEPTH
i.e. 10mm pipe = 14mm x 25mm ANNULAR GAP

20mm = 6mm Annular Gap	75mm = 10mm Annular Gap
40mm = 10mm Annular Gap	82mm = 11mm Annlar Gap
55mm = 10mm Annular Gap	90mm = 12mm Annular Gap
63mm = 10mm Annular Gap	110mm = 14mm Annular Gap
125mm = 16mm Annular Gap	

ASTROFLAME MANUFACTURERS OF PASSIVE FIRE STOP PRODUCTS	Astroflame (Fireseals) Ltd Intumescent House Unit 8 The IO Centre Stephenson Road Segensworth Fareham, PO15 5RU	FILE NAME: DET 26-0002 DATE: 20/05/14	ASTROFLAME has provided this specification on the basis of data, information & site conditions given to ASTROFLAME by the client, the respective ASTROFLAME product information & the existing level of technical knowledge. This specification relates to the expected performance of the proposed detail, were it to be subjected to the standardised test against which the judgement was made. The accuracy of this specification can only be guaranteed provided: 1. Only original ASTROFLAME products as defined within this specification are used 2. These specific products are used & installed only by a competant, experienced installer & by strictly obeying the conditions & calculations mentioned in this specification, as well as all relevent technical instructions, operating manuals, setting manuals, installation manuals & all other ASTROFLAME data sheets. 3. The proposed performance, listed prerequisities & criteria conform with actual existing site conditions & have been checked & agreed by the installer & client.

TECHNICAL DATA SHEET

ASTRO HPE SEALANT®

TECHNICAL SCHEDULE
No. CF 5127

Unique identification code of product-type: AFHPE

TYPICAL VERTICAL SECTION SHOWING USE OF THE ASTRO HPE SEALANT IN A BLOCKWALL WITH A PLASTIC PIPE

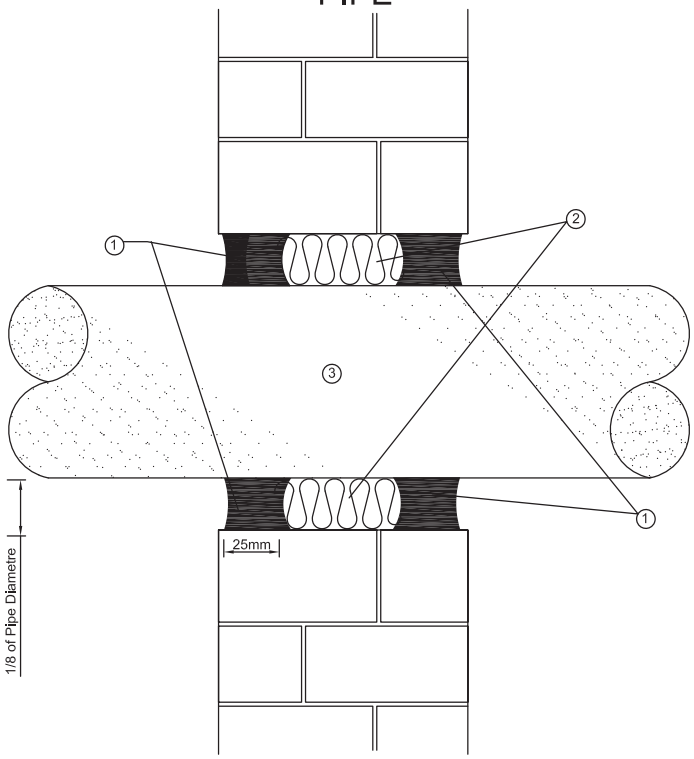

1 - ASTRO HPE SEALANT
2 - PE BACKING ROD or STONE WOOL BACKING
3 - COMBUSTIBLE PIPE

ANULAR GAP AROUND PIPE SHOULD BE 1/8th of the PIPE DIAMETRE & THEN 25mm DEPTH
i.e. 10mm pipe = 14mm x 25mm ANNULAR GAP

20mm = 6mm Annular Gap	75mm = 10mm Annular Gap
40mm = 10mm Annular Gap	82mm = 11mm Annlar Gap
55mm = 10mm Annular Gap	90mm = 12mm Annular Gap
63mm = 10mm Annular Gap	110mm = 14mm Annular Gap
125mm = 16mm Annular Gap	

ASTROFLAME MANUFACTURERS OF PASSIVE FIRE STOP PRODUCTS	Astroflame (Fireseals) Ltd Intumescent House Unit 8 The IO Centre Stephenson Road Segensworth Fareham, PO15 5RU	FILE NAME: DET 26-0001 DATE: 20/05/14	ASTROFLAME has provided this specification on the basis of data, information & site conditions given to ASTROFLAME by the client, the respective ASTROFLAME product information & the existing level of technical knowledge. This specification relates to the expected performance of the proposed detail, were it to be subjected to the standardised test against which the judgement was made. The accuracy of this specification can only be guaranteed provided: 1. Only original ASTROFLAME products as defined within this specification are used 2. These specific products are used & installed only by a competant, experienced installer & by strictly obeying the conditions & calculations mentioned in this specification, as well as all relevent technical instructions, operating manuals, setting manuals, installation manuals & all other ASTROFLAME data sheets. 3. The proposed performance, listed prerequisities & criteria conform with actual existing site conditions & have been checked & agreed by the installer & client.

TECHNICAL DATA SHEET

ASTRO HPE SEALANT®

TECHNICAL SCHEDULE
No. CF 5127

Unique identification code of product-type: AFHPE

BMTRADA

Laboratory measurement to BS EN ISO 10140-2 - Airborne Sound Insulation of Building Elements

UKAS TESTING No. 1762

Test Specimen Name: Astro HPE Sealant
Client: Astroflame Fireseals Limited
Test Specimen Installed By: Client
Area of Specimen (S): 14.20
Temperature in Test Rooms: 17.1 °C
Static Pressure: 10090.0 Pa
Humidity in Test Rooms: 52.3 %
Test Specimen Description: Pyropro HPE Sealant to source room side of wall, 15mm deep x 60mm wide x 2000mm high, with 55mm Stonewool (60kg/m³) backing, see appendix 2, drawing reference DET 26-0011 for details.

Reference number: BMT/MTP/F14022/P003
Date of Test: 28/01/2014
Source Room Volume: 86.00 m³
Receive Room Volume: 63.00 m³

f, Hz		R ,dB
50+		33.6
63+		37.2
80+		37.2
100		40.5
125		47.2
160		50.1
200		55.6
250		54.7
315		55.4
400		57.2
500		58.2
600		60.6
800		64.7
1000		66.5
1250	≥	68.1
1600	≥	68.8
2000	≥	69.0
2500	≥	68.9
3150	≥	69.0
4000	≥	68.2
5000	≥	69.4
AAD		-31.0

Frequency range for rating in accordance with ISO 717-1

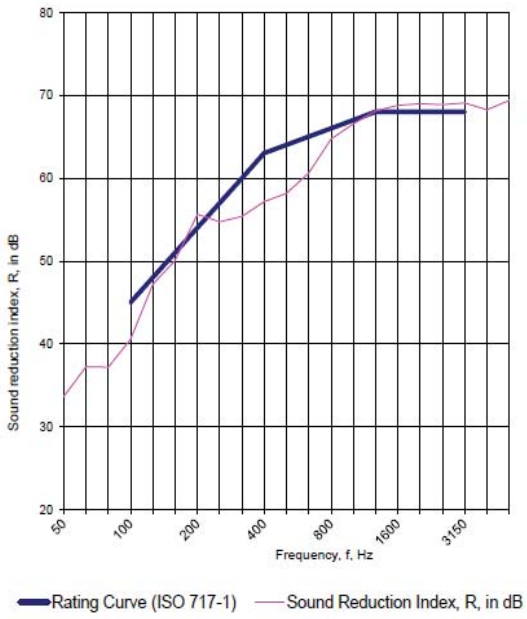

R_w =	64 dB
R_w+C =	62 dB
R_w+C_{tr} =	57 dB

$C_{(50-3150)}$ =	-3 dB	$C_{tr\,(50-3150)}$ =	-12 dB
$C_{(50-5000)}$ =	-2 dB	$C_{tr\,(50-5000)}$ =	-12 dB
$C_{(100-5000)}$ =	-1 dB	$C_{tr\,(100-5000)}$ =	-7 dB

Martin Durham
Technical Officer

+ indicates that the frequency is outside of our UKAS accreditation and is for information only

The legal validity of this report can only be claimed on presentation of the complete report

Report for: FSI Ltd
Ref: BMT/MTP/F14022

TECHNICAL DATA SHEET

ASTRO HPE SEALANT®

TECHNICAL SCHEDULE
No. CF 5127

ASTROFLAME
MANUFACTURERS OF PASSIVE FIRE STOP PRODUCTS

Unique identification code of product-type: AFHPE

BMTRADA

Laboratory measurement to BS EN ISO 10140-2 - Airborne Sound Insulation of Building Elements

UKAS TESTING No. 1762

Test Specimen Name: Astro HPE Sealant
Client: Astroflame Fireseals Limited
Test Specimen Installed By: BM TRADA
Area of Specimen (S): 1.00 m^2
Temperature in Test Rooms: 17.1 °C
Static Pressure: 10090.0 Pa
Humidity in Test Rooms: 52.3 %
Test Specimen Description: Pyropro HPE Sealant to source room side of wall, 15mm deep x 60mm wide x 2000mm high, with 55mm Stonewool (60kg/m^3) backing, see appendix 2, drawing reference DET 26-0011 for details.

Reference number: BMT/MTP/F14022/P003
Date of Test: 28/01/2014
Source Room Volume: 86.00 m^3
Receive Room Volume: 63.00 m^3

f, Hz	R, dB
50+	32.1
63+	35.7
80+	35.7
100	39.0
125	45.7
160	48.5
200	54.1
250	53.2
315	53.8
400	55.6
500	56.6
600	59.1
800	63.2
1000	65.0
1250	≥ 66.6
1600	≥ 67.3
2000	≥ 67.4
2500	≥ 67.5
3150	≥ 67.5
4000	≥ 66.7
5000	≥ 67.8
AAD	-26.2

Frequency range for rating in accordance with ISO 717-1

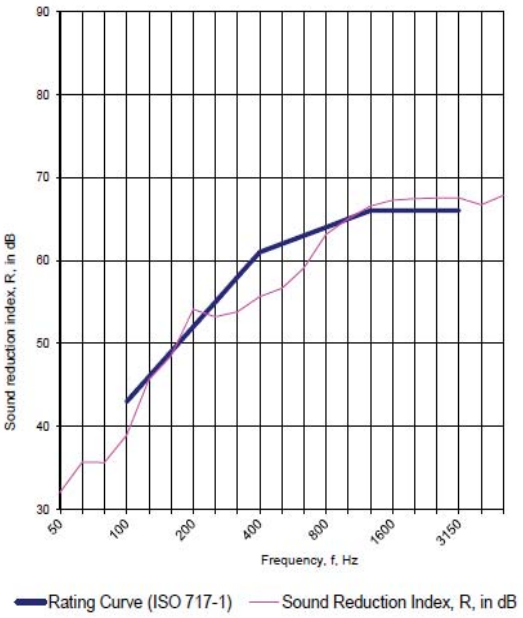

$D_{n,e,w}$ =	62 dB
$D_{n,e,w}+C$ =	61 dB
$D_{n,e,w}+C_{tr}$ =	56 dB

$C_{(50-3150)}$ =	-2 dB	$C_{tr\,(50-3150)}$ =	-11 dB
$C_{(50-5000)}$ =	-1 dB	$C_{tr\,(50-5000)}$ =	-11 dB
$C_{(100-5000)}$ =	0 dB	$C_{tr\,(100-5000)}$ =	-6 dB

Martin Durham
Technical Officer

+ indicates that the frequency is outside of our UKAS accreditation and is for information only

The legal validity of this report can only be claimed on presentation of the complete report

Report for: FSI Ltd
Ref: BMT/MTP/F14022

TECHNICAL DATA SHEET

ASTRO HPE SEALANT®

TECHNICAL SCHEDULE
No. CF 5127

Unique identification code of product-type: AFHPE

ASTRO HPE SEALANT TESTED TO EN 10140-2:2010 THROUGH A FLEXIBLE CONSTRUCTION

ACOUSTIC TEST RESULTS	
Partition & Sealant Result	64 Rw dB
Sealant Result	52 Rw dB
Sealant Result	62 Dnew dB

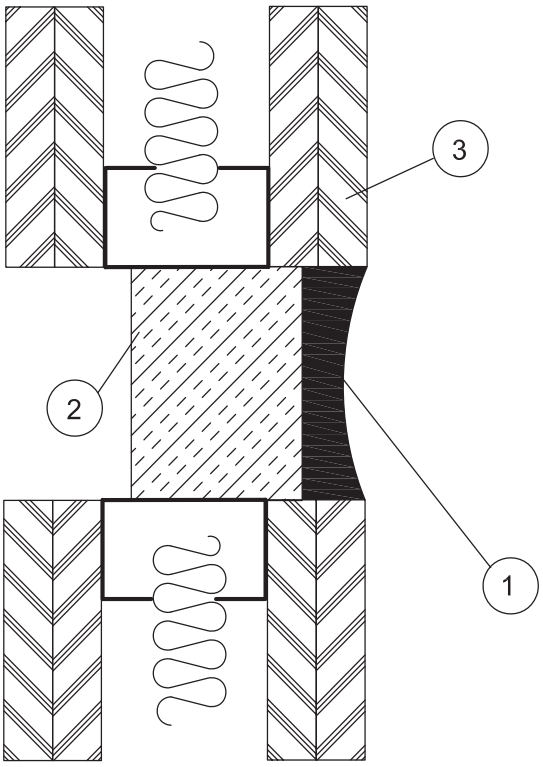

1 - ASTRO HPE SEALANT TO ONE SIDE OF WALL 15mm DEPTH
2 - 55mm DEPTH STONE WOOL 60kg DENSITY
3 - CONSTRUCTING ELEMENT RATED TO 65 dB

ASTROFLAME MANUFACTURERS OF PASSIVE FIRE STOP PRODUCTS	Astroflame (Fireseals) Ltd Intumescent House Unit 8 The IO Centre Stephenson Road Segensworth Fareham, PO15 5RU	FILE NAME: DET 26-0011 DATE: 20/05/14	ASTROFLAME has provided this specification on the basis of data, information & site conditions given to ASTROFLAME by the client, the respective ASTROFLAME product information & the existing level of technical knowledge. This specification relates to the expected performance of the proposed detail, were it to be subjected to the standardised test against which the judgement was made. The accuracy of this specification can only be guaranteed provided: 1. Only original ASTROFLAME products as defined within this specification are used 2. These specific products are used & installed only by a competant, experienced installer & by strictly obeying the conditions & calculations mentioned in this specification, as well as all relevent technical instructions, operating manuals, setting manuals, installation manuals & all other ASTROFLAME data sheets. 3. The proposed performance, listed prerequisities & criteria conform with actual existing site conditions & have been checked & agreed by the installer & client.

TECHNICAL DATA SHEET

ASTRO HPE SEALANT®

TECHNICAL SCHEDULE
No. CF 5127

Unique identification code of product-type: AFHPE

ASTRO HPE SEALANT TESTED TO EN 10140-2:2010 THROUGH A RIGID CONSTRUCTION

ACOUSTIC TEST RESULTS	
Wall & Sealant Result	64 Rw dB
Sealant Result	52 Rw dB
Sealant Result	62 Dnew dB

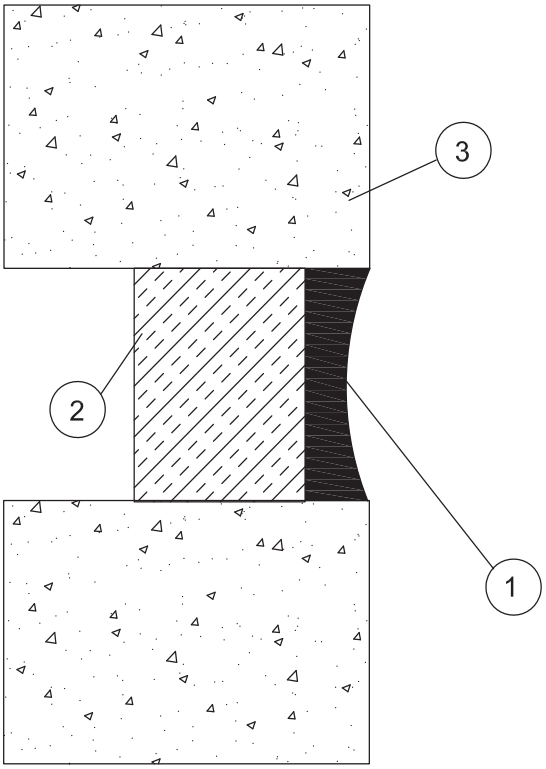

1 - ASTRO HPE SEALANT TO ONE SIDE OF WALL 15mm DEPTH
2 - 55mm DEPTH STONE WOOL 60kg DENSITY
3 - CONSTRUCTING ELEMENT RATED TO 65 dB

ASTROFLAME MANUFACTURERS OF PASSIVE FIRE STOP PRODUCTS	Astroflame (Fireseals) Ltd Intumescent House Unit 8 The IO Centre Stephenson Road Segensworth Fareham, PO15 5RU	FILE NAME: DET 26-0010 DATE: 20/05/14	ASTROFLAME has provided this specification on the basis of data, information & site conditions given to ASTROFLAME by the client, the respective ASTROFLAME product information & the existing level of technical knowledge. This specification relates to the expected performance of the proposed detail, were it to be subjected to the standardised test against which the judgement was made. The accuracy of this specification can only be guaranteed provided: 1. Only original ASTROFLAME products as defined within this specification are used 2. These specific products are used & installed only by a competant, experienced installer & by strictly obeying the conditions & calculations mentioned in this specification, as well as all relevent technical instructions, operating manuals, setting manuals, installation manuals & all other ASTROFLAME data sheets. 3. The proposed performance, listed prerequisities & criteria conform with actual existing site conditions & have been checked & agreed by the installer & client.

TECHNICAL DATA SHEET

ASTRO HPE SEALANT®

TECHNICAL SCHEDULE
No. CF 5127

Unique identification code of product-type: AFHPE

Technical specification document
No: Chilt/P12083/10

Performance testing to the principles of BS EN 1026: 2000 Windows and doors - Air permeability - Test method was conducted on your panel on 13 September 2012. The technical specification is detailed below. The specimen was delivered to Chiltern Dynamics laboratory on 10 September 2012

Description of construction

The specimen was identified as Pyrocoustic HPE sealant. The overall panel dimensions were 30mm wide x 1200mm high x 50mm deep and mounted within a softwood subframe for installation into the test rig.

	Material / type	Dimensions (mm)	Density (kg/m³)
Sealant	Astro HPE Sealant	30 wide Nominal 25 deep	-

Astroflame Fireseals Ltd
Unit 8, The I O Centre
Stephenson Road
Segensworth, Fareham
Hampshire, PO15 5RU

Tel: +44 (0) 1329 844500
Fax: +44 (0) 1329 844600
Email: sales@astroflame.com
Website: www.astroflame.com

TECHNICAL DATA SHEET

ASTRO HPE SEALANT®

TECHNICAL SCHEDULE
No. CF 5127

ASTROFLAME
MANUFACTURERS OF PASSIVE FIRE STOP PRODUCTS

Unique identification code of product-type: AFHPE

BMTRADA

Results of Test: Chilt/P12083/10/AR1

Astroflame (Fireseals) Limited

Intumescent House
Unit 8, The IO Centre
Stephenson Road
Segensworth, Fareham
PO15 5RU

This document confirms that performance testing was conducted on 13 September 2012. Testing was conducted the principles of the following standard:-

- BS EN 1026: 2000 Windows and doors - Air permeability - Test method.

The following results were achieved

Product tested			Astro HPE Sealant	
	Results under positive chamber pressure		Results under negative chamber pressure	
Pressure (Pa)	Leakage (m^3/h)	Leakage ($m^3/m^2/h$)	Leakage (m^3/h)	Leakage ($m^3/m^2/h$)
50	0.2	5.6	0.3	8.3
100	0.4	11.1	0.6	16.7
150	0.7	19.4	0.9	25.0
200	1.0	27.8	1.2	33.3
250	1.1	30.6	1.6	44.4
300	1.2	33.3	1.9	52.8
450	2.2	61.1	2.7	75.0
600	2.4	66.7	3.4	94.4

The results relate only to the specimen tested, as detailed in the technical specification Chilt/P12083/tec10/AR1

Paul Andrews – Head of Section

Vincent Kerrigan - Technical Manager
Date: 31 October 2013

BM TRADA
Chiltern House, Stocking Lane, Hughenden Valley, High Wycombe, HP14 4ND, United Kingdom
Tel: 01494 569800 Fax: 01494 564895
Web: www.bmtradagroup.com
Email: testing@bmtrada.com
This document is confidential and remains the property of Chiltern International Fire Ltd, trading as BM TRADA

Page 3 of 5